EST. 1955

SPRING VALLEY

VILLAGE

Regular City Council Meeting

February 23, 2021

6:00 p.m.

Marcus Vajdos, Mayor
Bo Bothe
Tom Donaho

Allen Carpenter, Mayor Pro Tem
David Dominy
Joy McCormack

EST. 1955
SPRING VALLEY
VILLAGE

Notice is Hereby Given of a Regular Meeting of the City Council City of Spring Valley Village, Texas, 1025 Campbell Road, Spring Valley Village, Texas, in the Council Chambers, Tuesday, February 23, 2021, beginning at 6:00 p.m., For the Purpose of Considering and Acting upon the Following Items of Business:

In accordance with order of the Office of the Governor issued March 16, 2020, the City Council of Spring Valley Village will conduct the meeting scheduled at 6:00 p.m. on Tuesday, February 23, 2021 in the City Hall Council Chambers, located at 1025 Campbell Road, in part by telephone conference in order to advance the public health goal of limiting face-to-face meetings (also called "social distancing") to slow the spread of the Coronavirus (COVID-19).

The meeting agenda and agenda packet are posted online at www.springvalleytx.com.

The video link to this meeting is https://us02web.zoom.us/j/88465247241

The public toll-free dial-in numbers to participate in the telephonic meeting are 1-346-248-7799 (Houston), 1-253-215-8782 (US), and 1-301-715-8592 (US); enter the Meeting ID: 884 6524 7241 and #.

The public will be permitted to offer public comments telephonically as provided by the agenda and as permitted by the presiding officer during the meeting.

A recording of the telephonic meeting will be made, and will be available to the public in accordance with the Open Meetings Act upon written request.

1. CALL THE ROLL AND ANNOUNCE A QUORUM IS PRESENT

2. INTRODUCTIONS

3. PROCLAMATIONS / ANNOUNCEMENTS / SWEARING-IN

None.

4. PUBLIC COMMENTS

At this time, any person with City-related business may speak to the Council. In compliance with the Texas Open Meetings Act, the City Council may not deliberate. **Comments from the public should be limited to a maximum of three (3) minutes per individual speaker.**

5. CONSENT AGENDA

All matters listed under consent agenda, are considered to be routine by the City Council and will be enacted by one motion. There will not be separate discussion of these items. If discussion is desired, that item will be removed from the consent agenda and will be considered separately.

5.1 Minutes for Special Called City Council Meeting on January 26, 2021

5.2 Minutes for Regular City Council Meeting on January 26, 2021

5.3 Approval of Pay Estimate No. 3 for Green Valley Drive & Winningham Lane Pavement & Utility Improvements Project to Conrad Construction Co., LTD. in the Amount of $51,733.80.

5.4 Approval of Pay Estimate No. 4 for Green Valley Drive & Winningham Lane Pavement & Utility Improvements Project to Conrad Construction Co., LTD. in the Amount of $151,556.92

5.5 Resolution Number 21-XX - A RESOLUTION OF THE CITY COUNCIL OF THE CITY OF SPRING VALLEY VILLAGE, TEXAS, APPROVING THE TERMS AND CONDITIONS OF CHANGE ORDER NUMBER 1 TO THE AGREEMENT BY AND BETWEEN THE CITY OF SPRING VALLEY VILLAGE, TEXAS AND CONRAD CONSTRUCTION, LTD., FOR GREEN VALLEY & WINNINGHAM PAVEMENT & UTILITY IMPROVEMENTS PROJECT; PROVIDING FOR THE INCORPORATION OF PREAMBLE; AUTHORIZING THE MAYOR TO EXECUTE ANY AND ALL DOCUMENTS NECESSARY TO EFFECTUATE SUCH AGREEMENT; AND PROVIDING AN EFFECTIVE DATE.

5.6 Approval of Pay Estimate No. 5 for the New Production Well Project to W. W. Payton Corporation in the Amount of $129,060.00.

5.7 Resolution Number 21-XX - A RESOLUTION OF THE CITY COUNCIL OF THE CITY OF SPRING VALLEY VILLAGE, TEXAS, RATIFYING THE ACTIONS OF THE CITY ADMINISTRATOR IN EXECUTING AN AMENDMENT TO THE CONTRACT BY AND BETWEEN THE CITY OF SPRING VALLEY VILLAGE, TEXAS AND CONRAD CONSTRUCTION CO. LTD. FOR PAVING AND UTILITY IMPROVEMENTS TO SERVE LONE STAR DR., LOESER DR., TRAWEEK DR., WEST TEX DR. AND LARIAT DR. (CSB #2020-11-101); PROVIDING FOR INCORPORATION OF PREAMBLE; AND PROVIDING AN EFFECTIVE DATE.

5.8 Resolution Number 21-XX - A RESOLUTION OF THE CITY COUNCIL OF THE CITY OF SPRING VALLEY VILLAGE, TEXAS, ADOPTING A PUBLIC INFRASTRUCTURE DESIGN MANUAL; PROVIDING FOR THE INCORPORATION OF PREAMBLE; AND PROVIDING AND PROVIDING AN EFFECTIVE DATE.

OLD BUSINESS

6. UPDATE, DISCUSSION AND POSSIBLE DIRECTION CONCERNING: January 2021 Police Department Staff Report (Chief Evans):

1. Number of Calls for Service
2. Number of Traffic Violations
3. Number of K-9 Deployments

7. **UPDATE, DISCUSSION AND POSSIBLE DIRECTION CONCERNING:** Activities of the Village Fire Department Commissioners Meeting on January 27, 2021 and Any Special Meetings That May Have Occurred since January 27, 2021. (Mayor Pro-Tem Carpenter / Council Member Bothe)

8. **UPDATE, DISCUSSION AND POSSIBLE DIRECTION CONCERNING:** City's Activities Related to Response to Severe Winter Weather.

NEW BUSINESS

9. **CONSIDERATION AND POSSIBLE ACTION CONCERNING:** Ordinance Number 2021-XX - AN ORDINANCE OF THE CITY OF SPRING VALLEY VILLAGE, REVISING ARTICLE 3.1500, DRAINAGE CRITERIA, OF CHAPTER 3, BUILDING AND CONSTRUCTION, OF THE CODE OF ORDINANCES OF THE CITY OF SPRING VALLEY VILLAGE, TEXAS BY DELETING EXHIBIT 1, DETAIL FOR CURB DRAIN CONNECTIONS, AND ADOPTING A NEW EXHIBIT 1, DETAILS FOR CURB DRAIN CONNECTIONS; PROVIDING FOR THE INCORPORATION OF PREAMBLE; PROVIDING A PENALTY IN AN AMOUNT NOT TO EXCEED $2,000.00 FOR EACH VIOLATION OF THIS ORDINANCE WITH EACH DAY OF VIOLATION CONSTITUTING A SEPARATE VIOLATION; AND PROVIDING A REPEALER CLAUSE, A SEVERABILITY CLAUSE, A SAVINGS CLAUSE, AND AN EFFECTIVE DATE.

10. **CONSIDERATION AND POSSIBLE ACTION CONCERNING:** Ordinance Number 2021-XX – AN ORDINANCE AMENDING THE CODE OF ORDINANCES OF THE CITY OF SPRING VALLEY VILLAGE, TEXAS, BY AMENDING SECTION 3.001 RESIDENTIAL BUILDING AND CONSTRUCTION FEE SCHEDULE OF APPENDIX "A", SCHEDULE OF FEES, FOR THE CITY OF SPRING VALLEY VILLAGE BY ESTABLISHING A NEW FEE FOR CURB DRAIN CONNECTION DEVICES; AND PROVIDING A REPEALER CLAUSE, A SEVERABILITY CLAUSE, AND AN EFFECTIVE DATE.

11. **CONSIDERATION AND POSSIBLE ACTION CONCERNING:** Resolution Number 21-XX - A RESOLUTION OF THE CITY COUNCIL OF THE CITY OF SPRING VALLEY VILLAGE, TEXAS, ADOPTING AN ELECTRONIC SIGNATURE POLICY; AND PROVIDING AN EFFECTIVE DATE.

12. **CONSIDERATION AND POSSIBLE ACTION CONCERNING:** Ordinance No. 2021-XX: AN ORDINANCE OF THE CITY OF SPRING VALLEY VILLAGE, TEXAS, DECLARING UNOPPOSED CANDIDATES IN THE MAY 1, 2021 GENERAL CITY ELECTION ELECTED TO OFFICE; PROVIDING FOR THE INCORPORATION OF PREAMBLE; CANCELING THE MAY 1, 2021 GENERAL CITY ELECTION; PROVIDING A SEVERABILITY CLAUSE, AND AN EFFECTIVE DATE.

13. **UPDATE, DISCUSSION AND POSSIBLE DIRECTION CONCERNING:** Briefing

by City Administrator:

1. Status of New Production Well
2. Status of Loeser, Traweek, Lone Star and W. Tex Paving and Utility Improvements Project
3. Green Valley Drive & Winningham Lane (West of Voss) Roadway, Drainage and Utility Improvements 2020

14. ADJOURNMENT

Agenda items may not necessarily be considered in the order that they appear. With regard to any item, Council may take various actions, including but not limited to rescheduling an item in its entirety or for particular action at a future date or time.

The City Council reserves the right to convene in executive session from time to time as deemed necessary during this meeting to discuss any of the matters listed in the agenda, as authorized by Texas Government Code Sections 551.071 (Consultation with Attorney), 551.072 (Deliberations about Real Property), 551.073 (Deliberations about Gifts & Donations), 551.074 (Personnel Matters), 551.076 (Deliberations Regarding Security Devices) or 551.087 (Deliberations Regarding Economic Development Negotiations).

I certify that a copy of the February 23, 2021 agenda of items to be considered by City Council was posted on or before the 19th day of February, 2021, at 2:00 p.m. pursuant to the Open Meetings Act, Chapter 551 of the Texas Government Code.

Attest: Roxanne Benitez

Roxanne Benitez, TRMC, CPM, CMCC
City Secretary

In compliance with the Americans with Disabilities Act, this facility is wheelchair accessible and accessible parking spaces are available. To better serve attendees, requests for accommodations or interpretive services should be made 48 hours prior to this meeting. Please contact the City Secretary's office at 713-465-8308, Fax 713-461-7969, or Email secretary@springvalleytx.com for further information.

Consent Agenda Items

MINUTES OF THE SPECIAL CALLED CITY COUNCIL MEETING
CITY OF SPRING VALLEY VILLAGE, TEXAS
TUESDAY, JANUARY 26, 2021 AT 5:00 P.M.
IN THE COUNCIL CHAMBERS OF CITY HALL
1025 CAMPBELL ROAD, HOUSTON, TEXAS

1. CALL THE ROLL AND ANNOUNCE A QUORUM IS PRESENT

With a quorum of the Council Members present, the Special Called Meeting of the Spring Valley Village City Council was called to order by Council Member McCormack at 5:06 p.m.

Members Present:
Mayor Marcus Vajdos (arrived at 5:11 p.m. by video conference)
Mayor Pro-Tem Allen Carpenter (by video conference)
Council Member David Dominy (by video conference)
Council Member Tom Donaho (by video conference)
Council Member Joy McCormack

Members Absent:
Council Member Bo Bothe

2. DISCUSSION AND POSSIBLE DIRECTION CONCERNING: Adopted Park Reservation/Use Fees.

City Administrator Julie Robinson provided a brief history of how the current fee and deposit schedule for park facility reservations was adopted. She also advised that the City has received numerous requests to reserve the park facilities since the COVID-19 pandemic and that Staff has been very accommodating to applicants. There was discussion concerning how park reservation fees and deposits are handled, how individuals may submit a reservation request, and ways to automate these processes.

Following the discussion, it was the consensus of the Council that the current deposit and fee schedule remain the same, and it was the direction of the Council for Staff to seek automated solutions for requesting park facility reservations, accepting payments, and refunding deposits.

3. ADJOURNMENT

Council Member Donaho made a motion to adjourn the meeting at 5:22 p.m., and Council Member Dominy seconded the motion. Motion carried 4-0.

Signed: _____
Marcus Vajdos
Mayor

Attest: _____
Roxanne Benitez, TRMC, CPM, CMCC
City Secretary

MINUTES OF THE REGULAR CITY COUNCIL MEETING
CITY OF SPRING VALLEY VILLAGE, TEXAS
TUESDAY, JANUARY 26, 2021 AT 6:00 P.M.
IN THE COUNCIL CHAMBERS OF CITY HALL
1025 CAMPBELL ROAD, HOUSTON, TEXAS

1. CALL THE ROLL AND ANNOUNCE A QUORUM IS PRESENT

With a quorum of the Council Members present, the Regular Meeting of the Spring Valley Village City Council was called to order by Council Member McCormack at 6:00 p.m.

Members Present:
Mayor Marcus Vajdos (by video conference)
Mayor Pro-Tem Allen Carpenter (by video conference)
Council Member Bo Bothe (arrived at 6:11 p.m.)
Council Member David Dominy (by video conference)
Council Member Tom Donaho (by video conference)
Council Member Joy McCormack

Members Absent:
None.

2. INTRODUCTIONS

Julie M. Robinson, City Administrator
Roxanne Benitez, City Secretary
Pat Riley, Public Works Director
Michelle Yi, City Treasurer
Zachary Meadows, Director of Community Development
Matthew Hitt, Assistant to the City Administrator
Mark Schulze, Police Captain
David Dixon, Police Commissioner
Loren Smith, City Attorney

3. PROCLAMATIONS / ANNOUNCEMENTS / SWEARING-IN

None.

4. PUBLIC COMMENTS

At this time, any person with City-related business may speak to the Council. In compliance with the Texas Open Meetings Act, the City Council may not deliberate. **Comments from the public should be limited to a maximum of three (3) minutes per individual speaker.**

4.1 Brian Schmulen, who lives at 5 Burkhart Forest Court, advised that he is currently having a home built at 8420 Burkhart Road, and he explained issues he had with meeting the current drainage criteria. Based on the issues he faced in complying with the City's drainage criteria, he stated that the City should reconsider the regulations applicable to large lots.. He also advised that he wanted to make Council aware of his issue.

5. CONSENT AGENDA

All matters listed under consent agenda, are considered to be routine by the City Council and will be enacted by one motion. There will not be separate discussion of these items. If discussion is desired, that item will be removed from the consent agenda and will be considered separately.

5.1 Minutes for Special Called City Council Meeting on December 15, 2020

5.2 Minutes for Regular City Council Meeting on December 15, 2020

5.3 2020 Racial Profiling Report presented by the Spring Valley Village Police Department.

5.4 Approval of Pay Estimate No. 2 for Green Valley Drive & Winningham Lane Pavement & Utility Improvements Project to Conrad Construction Co., LTD. in the Amount of $151,628.40.

5.5 Resolution Number 21-XX - A RESOLUTION OF THE CITY COUNCIL OF THE CITY OF SPRING VALLEY VILLAGE, TEXAS, APPROVING THE TERMS AND CONDITIONS OF AN INTERLOCAL AGREEMENT FOR PURCHASING BETWEEN THE CITY OF PEARLAND, TEXAS, AND THE CITY OF SPRING VALLEY VILLAGE, TEXAS; PROVIDING FOR THE INCORPORATION OF PREAMBLE; AUTHORIZING EXECUTION OF THE INTERLOCAL AGREEMENT BY THE CITY ADMINISTRATOR; AND PROVIDING AN EFFECTIVE DATE.

5.6 Resolution Number 21-XX – A RESOLUTION OF THE CITY COUNCIL OF THE CITY OF SPRING VALLEY VILLAGE, TEXAS, SUPPORTING GREATER HARRIS COUNTY 9-1-1 EMERGENCY NETWORK'S LEGISLATIVE EFFORTS TO CONTINUE THE TECHNOLOGICAL ENHANCEMENTS AND OPERATIONAL ADVANCEMENTS OF THE 9-1-1 SYSTEM TO BETTER SERVE THE 9-1-1 EMERGENCY NEEDS IN HARRIS AND FORT BEND COUNTIES BY ALLOWING ITS BOARD OF MANAGERS TO SET THE 9-1-1 WIRELESS FEE IN THE SAME MANNER AS THE BOARD CURRENTLY SETS THE WIRELINE FEE; PROVIDING FOR THE INCORPORATION OF PREAMBLE; PROVIDING FOR THE DELIVERY OF SUCH RESOLUTION TO STATE LEGISLATORS REPRESENTING THE CITY OF SPRING VALLEY VILLAGE; AND PROVIDING AN EFFECTIVE DATE.

Council Member Donaho made a motion to approve all items on the Consent Agenda, and Council Member Dominy seconded the motion. Motion carried 5-0.

OLD BUSINESS

6. UPDATE, DISCUSSION AND POSSIBLE DIRECTION CONCERNING: December 2020 Police Department Staff Report (Chief Evans):

Captain Schulze provided the report on behalf of Chief Evans.

1. Number of Calls for Service – 2,353
2. Number of Traffic Violations – 1,023
3. Number of K-9 Deployments – 137

Commissioner Dixon advised of current high crime and homicide rates in Houston and the surrounding areas. He also updated the Council on the Legacy Fund's fundraising efforts

and thanked Council Members Bothe and McCormack, City Administrator Robinson, and City Treasurer Yi for their assistance on the implementation of the fund's electronic donation systems through PayPal and Amazon Smile.

7. **UPDATE, DISCUSSION AND POSSIBLE DIRECTION CONCERNING:** Activities of the Village Fire Department Commissioners Meeting on December 16, 2020 and Any Special Meetings That May Have Occurred since December 16, 2020. (Mayor Pro-Tem Carpenter / Council Member Bothe)

Mayor Pro-Tem Carpenter advised that the Village Fire Department assisted with an accident that occurred on Katy Freeway the previous evening which involved an Amazon truck. He also advised that the Fire Department was currently fully staffed, under budget, and the new fire engine was in service. Mayor Pro-Tem Carpenter advised that the contractors have completed the demolition portion of the Fire Station rehabilitation.

8. **UPDATE, DISCUSSION AND POSSIBLE DIRECTION CONCERNING:** Activities of the Planning and Zoning Commission Meeting of January 12, 2021. (Council Member Dominy / Council Member Donaho / City Attorney Loren Smith)

City Attorney Loren Smith advised that agenda item numbers 9 and 10 were discussed and recommended for approval at the January 12 Planning & Zoning Commission meeting.

NEW BUSINESS

9. **CONDUCT A PUBLIC HEARING CONCERNING:** Ordinance Number 2021-XX – AN ORDINANCE AMENDING EXHIBIT "A" OF CHAPTER 12, PLANNING AND ZONING, OF THE CODE OF ORDINANCES OF THE CITY OF SPRING VALLEY VILLAGE, TEXAS, EXHIBIT "A" BEING THE CITY'S ZONING ORDINANCE BY AMENDING SECTION 3, DEFINITIONS, TO AMEND THE DEFINITIONS 03: A-02 - ACCESSORY USE, 03: A-03 – RESIDENTIAL ACCESSORY BUILDING, 03: G-03, GARAGE ATTACHED, AND TO ADD DEFINITIONS 03: P-05 - PRIMARY STRUCTURE, 03: P-06 – PRIMARY USE, AND 03: P-07 - PRINCIPAL; AMENDING SECTION 05:02.01, GARAGES AND CARPORTS, OF 05:02, LIMITATIONS AND RESTRICTIONS, OF SECTION FIVE: BUILDING AND USE RESTRICTIONS IN DWELLING DISTRICT "A" OF EXHIBIT "A" TO CHANGE THE TERM DWELLING TO PRIMARY STRUCTURE; PROVIDING FOR SEVERABILITY; PROVIDING A SAVINGS CLAUSE AND AN EFFECTIVE DATE; AND PROVIDING A PENALTY OF AN AMOUNT NOT TO EXCEED $2,000 FOR EACH DAY OF VIOLATION OF ANY PROVISION HEREOF.

Council Member McCormack opened the Public Hearing at 6:28 p.m.

A. Presentation of Proposed Ordinance by City Staff

Director of Community Development Zachary Meadows presented the proposed revisions and advised that the proposed ordinance amendments were approved at the October 13, 2020 Planning and Zoning Commission meeting. Mr. Meadows also advised that he worked with City Attorney Loren Smith to provide clarification on ordinance language and definitions. Mr. Meadows also explained that Staff had recommended further revising the definition for "Residential Accessory Building" to accommodate residents

who are now or may be permanently working remotely from home; however, the Commission did not discuss that recommendation.

B. Those In Favor

None.

C. Those Opposed

None.

D. Adjourn Public Hearing

Council Member McCormack adjourned the Public Hearing at 6:31 p.m.

10. CONSIDERATION AND POSSIBLE ACTION CONCERNING: Ordinance Number 2021-XX – AN ORDINANCE AMENDING EXHIBIT "A" OF CHAPTER 12, PLANNING AND ZONING, OF THE CODE OF ORDINANCES OF THE CITY OF SPRING VALLEY VILLAGE, TEXAS, EXHIBIT "A" BEING THE CITY'S ZONING ORDINANCE BY AMENDING SECTION 3, DEFINITIONS, TO AMEND THE DEFINITIONS 03: A-02 - ACCESSORY USE, 03: A-03 – RESIDENTIAL ACCESSORY BUILDING, 03: G-03, GARAGE ATTACHED, AND TO ADD DEFINITIONS 03: P-05 - PRIMARY STRUCTURE, 03: P-06 – PRIMARY USE, AND 03: P-07 - PRINCIPAL; AMENDING SECTION 05:02.01, GARAGES AND CARPORTS, OF 05:02, LIMITATIONS AND RESTRICTIONS, OF SECTION FIVE: BUILDING AND USE RESTRICTIONS IN DWELLING DISTRICT "A" OF EXHIBIT "A" TO CHANGE THE TERM DWELLING TO PRIMARY STRUCTURE; PROVIDING FOR SEVERABILITY; PROVIDING A SAVINGS CLAUSE AND AN EFFECTIVE DATE; AND PROVIDING A PENALTY OF AN AMOUNT NOT TO EXCEED $2,000 FOR EACH DAY OF VIOLATION OF ANY PROVISION HEREOF.

Council Member McCormack read the Ordinance by caption only. City Administrator Julie Robinson advised that, during the January 12, 2021 meeting, the Commission was asked to consider further amendment of the definition of "Residential Accessory Building" as it related to the use of accessory structures as possible home offices for residents who are now or may be permanently working remotely. However, there was no discussion about the issue during the Commission meeting. Ms. Robinson asked the Council for direction as to whether they would be willing to consider revisions to the Residential Accessory Building definition and associated regulations in order to accommodate this scenario Following discussion, it was the direction of the Council that City staff proceed with an evaluation of the definition of Residential Accessory Building and applicable regulations and any revisions that should be considered to accommodate residents who are now or may be permanently working from home. Ms. Robinson indicated that there would be additional discussion on this issue in the future. After discussion, Council Member Carpenter made a motion to approve Ordinance No. 2021-01, and Council Member Bothe seconded the motion. Motion carried 5-0.

11. CONSIDERATION AND POSSIBLE ACTION CONCERNING: Ordinance No. 2021-XX: AN ORDINANCE OF THE CITY OF SPRING VALLEY VILLAGE, TEXAS, PROVIDING FOR THE HOLDING OF A GENERAL ELECTION TO BE HELD ON MAY 1, 2021 FOR THE PURPOSE OF ELECTING THREE (3) CITY COUNCIL MEMBERS; AND PROVIDING DETAILS RELATING TO THE HOLDING OF SUCH ELECTION.

Council Member McCormack read the Ordinance by caption only. Council Member Bothe made a motion to approve Ordinance No. 2021-02, and Council Member Carpenter seconded the motion. Motion carried 5-0.

12. CONSIDERATION AND POSSIBLE ACTION CONCERNING: Ordinance No. 2021-XX – AN ORDINANCE OF THE CITY OF SPRING VALLEY VILLAGE, TEXAS, AMENDING THE CITY PERSONNEL MANUAL, AS ADOPTED BY ORDINANCE NUMBER 95-05 DULY PASSED AND APPROVED ON MARCH 29, 1995, BEING AMENDMENT NO. 14 TO THE PERSONNEL MANUAL, TO AMEND APPENDIX "A," "JOB ALIGNMENT AND SALARY RANGES FOR ALL CITY POSITIONS" TO DELETE THE POSITION OF "UTILITY BILLING/PERMIT TECHNICIAN" FROM GRADE 5; ADD THE POSITIONS OF "ADMINISTRATIVE SERVICES COORDINATOR" AND "PERMIT TECHNICIAN" AT GRADE 5; AND ADD THE EXISTING POSITION OF "ASSISTANT CITY TREASURER" AT GRADE 12; PROVIDING FOR THE INCORPORATION OF PREAMBLE; AND PROVIDING A REPEALER CLAUSE, A SEVERABILITY CLAUSE, AND AN EFFECTIVE DATE.

Council Member McCormack read the Ordinance by caption only. Council Member Dominy made a motion to approve Ordinance No. 2021-03, and Council Member Donaho seconded the motion. Motion carried 5-0.

13. CONSIDERATION AND POSSIBLE ACTION CONCERNING: Changing the Dates of the City Council Meetings for May, November, and December.

After a brief discussion, Council Member McCormack made a motion to change the dates of the November and December City Council meetings to November 16 and December 14; with the May Council meeting remaining on May 25, and Council Member Donaho seconded the motion. Motion carried 5-0.

14. CONSIDERATION AND POSSIBLE ACTION CONCERNING: Recommendations For Use Of Unassigned General Fund, Fund Balance From FY 2019.

City Administrator Julie Robinson advised that all of the recommendations except one were previously approved by the Council. The one proposed new recommendation was to use $174,009 to cover Police Department overtime expenditures related to COVID-19. Council Member Dominy asked if the City would receive a reimbursement from FEMA for this amount. Ms. Robinson advised that requests are submitted to FEMA quarterly, and, if approved, FEMA would reimburse 75% of the costs. Council Member Bothe made a motion to approve use of the unassigned General Fund, Fund Balance from FY 2018-2019 as recommended by Staff, and Council Member Dominy seconded the motion. Motion carried 5-0.

15. DISCUSSION AND DIRECTION CONCERNING: Possible Review and Revision of Planned Area Development Districts and Applicable Zoning Regulations.

City Administrator Julie Robinson advised that she was circling back to the Council's discussion during the November 17, 2020 meeting during which there was a brief discussion concerning the need to revisit the zoning regulations as they relate to the Planned Area Development Districts (PADDs) to ensure the regulations adopted are still relevant to the way development has been occurring over recent years. Based on issues that Staff identified through the last several PAD developments and that have been expressed by the property owners that own property within the

various PADDs, some of the large areas that should be reviewed are permitted uses and sign regulations to ensure that the regulations remain current. Additionally, in light of the City's concerns about the negative impact to commercial property tax valuations as a result of the Pandemic, the review could provide a vehicle for ensuring that commercial properties have the flexibility they need to be able to lease their available spaces. Ms. Robinson requested direction from the Council as to whether this is a project that the Council wants Staff to undertake particularly in light of the changes that have occurred since the regulations were originally adopted and the new post-COVID state of the market

Following discussion, it was the consensus of the Council that it is important to undertake a complete review of the current Planned Area Development Districts and their applicable zoning regulations and evaluate all provisions utilizing a big picture strategy. It was the direction of the Council for City Staff to proceed with developing a project outline for the review and evaluation, together with timeframes and an indication of the level of effort that would be needed in order to accomplish the project, to discuss with Council at next meeting.

16. DISCUSSION AND DIRECTION CONCERNING: Possible Installation of Bike Rack at Pech Road Footbridge Greenspace.

Mayor Vajdos advised the Council that he had received a request from a resident for the City to install a bike rack in the greenspace at the Pech Road Footbridge for children who walk their bikes across the bridge and then across Westview to lock them up at Valley Oaks Elementary. There was discussion concerning the reasoning for the bike rack, the number of children who could be impacted, liability issues for the City, the current situation with bike racks at Valley Oaks Elementary School based on discussions with Mrs. Reynolds, the Principal. Following discussion, it was the consensus of the City Council not to proceed with the installation of a bike rack at the Pech Road Footbridge as a City project but to use it as a potential Eagle or Girl Scout project.

17. UPDATE, DISCUSSION AND POSSIBLE DIRECTION CONCERNING: Briefing by City Administrator:

1. Status of New Production Well

   Public Works Director Pat Riley advised that walls and roof of the CMU (Concrete Masonry Unit) building were complete, with the contractor currently installing piping.

2. Status of Loeser, Traweek, Lone Star and W. Tex Paving and Utility Improvements Project

   Public Works Director Pat Riley advised that they are ready to issue the notice to proceed. He also advised that once the construction starts, one side of three individual streets will be done at the same time.

3. Green Valley Drive & Winningham Lane (West of Voss) Roadway, Drainage and Utility Improvements 2020

   Public Works Director Pat Riley advised that the contractor is making good progress. He also advised that half of Winningham was complete and water line testing will commence soon.

4. Legislative Update

   City Administrator Julie Robinson advised that the Legislature is back in session. She

also advised that Staff is currently tracking various bills concerning building materials, changes to Senate Bill 2, the ability of Texas Municipal League to lobby for cities, the 9-1-1 wireless fee, sales tax sourcing, and the use of videoconferencing as it relates to open meetings. Ms. Robinson advised that she will keep Council aware of pending legislation.

18. ADJOURNMENT

Council Member McCormack made a motion to adjourn the meeting at 7:18 p.m., and Council Member Bothe seconded the motion. Motion carried 5-0.

Signed: _____
Marcus Vajdos
Mayor

Attest: _____
Roxanne Benitez, TRMC, CPM, CMCC
City Secretary

Spring Valley Village City Council
Agenda Item Data Sheet

MEETING DATE:	February 23, 2021
TOPIC:	**Approval of Pay Estimate No. 3 for Green Valley Drive & Winningham Lane Pavement & Utility Improvements Project to Conrad Construction Co., LTD. in the Amount of $51,733.80**
BACKGROUND:	This is the third pay estimate to be submitted by Conrad Construction Co., LTD. for the Green Valley Drive & Winningham Lane Pavement & Utility Improvements Project (2020-07-100) for work completed on the Project from December 1, 2020, to December 31, 2020.
RECOMMENDATION:	Gessner Engineer Project Manager Sean Ray, ME, P.E. and City Staff have reviewed Pay Estimate No. 3 and recommend approval.
ATTACHMENTS:	• Pay Estimate No. 3 Submitted By Conrad Construction Co., LTD.
FUNDING ISSUES:	☐ Not applicable – no dollars are being spent or received. ☒ Full amount already budgeted in Acct/Project# 25-50-7518 ☐ Not budgeted, if approved, the following will be included in the next Budget Amendment: ☐ $_____ from Acct/Project# _____ will be transferred to Acct/Project# _____ ☐ _____ from unassigned fund balance will be used and added to Acct/Project# _____ ☐ $_____ will be added to Revenue Acct# __-____ and $_____ added to Expenditure Acct/Project# _____
FINANCE VERIFICATION OF FUNDING:	

SUBMITTING STAFF MEMBER: Pat Riley, Public Works Director	**CITY ADMINISTRATOR APPROVAL:**

DIVIDER PAGE

Cover Letter: Payment Application #3

GESSNER ENGINEERING

TO: **City of Spring Valley Village**
(Owner)
Contract: **Green Valley & Winningham Lane Roadway, Drainage, and Utility Improvements**
(Insert name of Contract as it appears in the Contract Documents)
Owner's Contract No. **2020-07-100**
Engineer: **Gessner Engineering**
Contractor: **Conrad Construction Co., LTD**

Conrad Construction Co., LTD has submitted **Payment Application #3** for work through **December 1, 2020 to December 31, 2020,** in the amount of **$51,733.80**. After review of work complete to date and material stored on-site, Gessner Engineering recommends the payment of **$51,733.80** to Conard Construction Co., LTD.

1.	Original Contract Amount:	$1,095,283.75
2.	Change Orders:	$0.00
3.	Total Current Contract Amount:	$1,095,283.75
4.	Construction Materials Testing to Date:	$6,754.00
5.	Payment to Centerpoint:	$13,194.00
6.	Total Value of Work Completed to Date:	$295,958.00
7.	Total Materials Stored to Date:	$0.00
8.	Total Completed & Stored to Date:	$295,958.00
9.	Retainage (10%):	$29,595.80
10.	Total Completed, Less Retainage:	$266,362.20
11.	Total Amount of Prior Payments:	$214,628.40
12.	Current Due Amount:	$51,733.80
13.	Total Balance Remaining (Including Retainage):	$828,921.55
14.	Notice to Proceed Date:	October 26, 2020
15.	Project Estimated Completion Date:	June 3, 2021

Cover Letter: Payment Application #3

GESSNER ENGINEERING

Recommend Payment:
See attached (Pay App)

Sean Ray, ME, PE
(ENGINEER)

PROJECT MANAGER
(TITLE)

Conrad Construction Co., Ltd.
P.O. Box 841134
Houston, Texas 77284

Project: Green Valley Dr. & Winningham Ln. , Project No. 2020-07-100

Pay Application No.	3	Work To Date:	$	295,958.00
Application Period	12-1-20 thru 12-31-20			
Original Contract Amount	$ 1,095,283.75			
Revised Contract Amount	$ -	Remaining Work	$	799,325.75
Notice To Proceed	10/26/2020			

Total Work To Date:	$	295,958.00
Materials Stored to Date	$	-
Total Work To Date & Stored Materials	$	295,958.00
Retainage (10%)	$	29,595.80
Total Work Complete, Less Retainage	$	266,362.20
Less Previous Payments	$	214,628.40
Total Due This Application	$	51,733.80

James R. Bolin
Conrad Const. Co., Ltd.

Sean Ray, M.E., P.E.
Engineer - Gessner Engineering

Pat Riley
Public Works Director
City of Spring Valley Village

CONTRACTOR'S AFFIDAVIT

OF BILLS PAID/LIEN RELEASE

OWNER : City of Spring Valley Village

PROJECT : Green Valley Dr. and Winningham Ln. – Reconstruction , Bid No. 2020-07-100

CONTRACTOR : Conrad Construction Co., Ltd.

I certify that all just and lawful bills against the below-named Contractor for labor, material and expendable equipment employed in the performance of said Contract for the period covering 12.1.20 through 12.31.20 have been paid in full. This is to certify that I am relieving the City of Spring Valley Village from any claims from debt occurring in connection with this project prior to 1.1.21 .

Firm: Conrad Construction Co., Ltd.

By : _____
Brian Conrad

Date : 1.5.21

Title : Vice President

Signed and sworn to before me a Notary Public in and for Harris County, Texas this 5th day of January , 2021.

_____
James R. Bolin

JAMES R. BOLIN
Notary Public, State of Texas
Comm. Expires 05-20-2024
Notary ID 10530801

Green Valley Drive and Winningham Lane – Project No. 2020-07-100

Conrad Construction Co., Ltd.

Pay Application No. : 3

Reporting Period : 12.1.20 thru 12.31.20

Subcontractor and Work Performed During This Period

Rods Surveying, Inc. - Construction Staking

Gessner Engineering - Testing Services

FROM: CONRAD CONSTRUCTION CO.,LTD.
P.O. BOX 841134
HOUSTON, TEXAS 77284

TO: CITY OF SPRING VALLEY VILLAGE
ACCOUNTS PAYABLE
1025 CAMPBELL ROAD
HOUSTON,TEXAS 77055

ATTN: SEAN RAY, M.E., P.E. - PROJECT MANAGER
REF: GREEN VALLEY DR. AND WINNINGHAM LN.
PROJ #: BID NO. 2020-07-100 , CC# 20/0324
DATE: 12/31/2020

PAY APPLICATION # : 3

DESCRIPTION	QUANTITY	UNIT	THIS ESTIMATE	PREVIOUS ESTIMATE	WORK TO DATE	%	UNIT PRICE	WORK TO DATE
GENERAL ITEMS								
1. MOBILIZATION, BONDS & INSURANCE	1.00	LS		1.00	1.00	100%	$ 75,000.00	$ 75,000.00
2. TRAFFIC CONTROL FOR ALL PHASES	1.00	LS	0.13	0.38	0.51	51%	$ 45,000.00	$ 22,950.00
3. SODDING UP TO R.O.W.	32200.00	SF		450.00	450.00	1%	$ 0.75	$ 337.50
4. EROSION CONTROL (SWPPP)	1.00	LS	0.13	0.38	0.51	51%	$ 2,500.00	$ 1,275.00
5. TREE PROTECTION, C.I.P.	1.00	LS	0.13	0.38	0.51	51%	$ 7,500.00	$ 3,825.00
DEMOLITION								
6. DEMOLITION OF EXISTING ROADWAY PAVEMENT AND BASE MATERIAL, INCL. HAUL OFF	3851.00	SY			0.00	0%	$ 6.00	$ -
7. DEMOLITION OF EXISTING DRIVEWAYS AND BASE MATERIAL, INCL. HAUL OFF	648.00	SY			0.00	0%	$ 7.00	$ -
8. DEMOLITION OF EXISTING SIDEWALK, INCL. HAUL OFF	70.00	SY			0.00	0%	$ 10.00	$ -
9. EXISTING LIGHT POLES TO BE TRANS-PORTED TO AND FROM THE CITY OF SPRING VALLEY PUBLIC WORKS YARD, AFTER REMOVAL FROM CENTERPOINT ENERGY	1.00	LS			0.00	0%	$ 5,000.00	$ -
10. EXISTING STREET/STOP SIGN TO BE SALVAGED AND REINSTALLED	3.00	EA			0.00	0%	$ 350.00	$ -
11. EXISTING 24" CMP STORM SEWER TO BE COMPLETELY REMOVED	69.00	LF		20.00	20.00	29%	$ 25.00	$ 500.00
12. EXIST. CURB INLET TO BE REMOVED	1.00	EA		1.00	1.00	100%	$ 650.00	$ 650.00

DESCRIPTION	QUANTITY	UNIT	THIS ESTIMATE	PREVIOUS ESTIMATE	WORK TO DATE	%	UNIT PRICE	WORK TO DATE
13. REMOVAL OF EXIST. TREES (5-14")	11.00	EA	2.00	6.00	8.00	73%	$ 650.00	$ 5,200.00
14. REMOVAL OF EXIST. TREES (15-25")	5.00	EA	1.00	2.00	3.00	60%	$ 1,200.00	$ 3,600.00
15. REMOVAL OF EXIST. TREES (SIZE 25" AND LARGER)	1.00	EA	1.00		1.00	100%	$ 2,000.00	$ 2,000.00
16. LANDSCAPED AREAS IN R.O.W. TO BE CLEARED	1.00	LS			0.00	0%	$ 1,500.00	$ -
17. REMOVE EXISTING 6"X2" REDUCER	1.00	EA			0.00	0%	$ 500.00	$ -
18. REMOVE EXISTING 8"X6" REDUCER	1.00	EA			0.00	0%	$ 500.00	$ -
19. REMOVE EXISTING SANITARY SEWER MANHOLE	2.00	EA			0.00	0%	$ 750.00	$ -
20. REMOVE EXISTING 8" PVC SANITARY SEWER	48.00	LF			0.00	0%	$ 25.00	$ -
21. CAP EXISTING 2" WATERLINE	1.00	EA			0.00	0%	$ 750.00	$ -
22. REMOVE EXISTING 6" GATE VALVE AND BOX	1.00	EA			0.00	0%	$ 750.00	$ -
PAVEMENT AND EARTHWORK								
23. EARTHWORK - CUT TO FILL TO DESIGN GRADES (IN PLACE)	145.00	CY			0.00	0%	$ 20.00	$ -
24. EARTHWORK - CUT TO HAUL TO DESIGN GRADES (IN PLACE)	85.00	CY			0.00	0%	$ 25.00	$ -
25. LIME STABILIZATION OF SUBGRADE WITH COMPACTION (DOES NOT INCLUDE COST OF LIME)	4987.00	SY			0.00	0%	$ 4.00	$ -
26. LIME FOR STABILIZATION OF SUBGRADE WITH COMPACTION (ASSUME 6% BY WEIGHT)	108.00	TON			0.00	0%	$ 190.00	$ -
27. 6" CRUSHED LIMESTONE BASE TXDOT ITEM 247 TYPE A, GRADES 1 OR 2	4142.00	SY			0.00	0%	$ 21.50	$ -
28. 6" CONCRETE PAVEMENT FOR ROAD-WAY AND DRIVEWAYS, INCLUDING 6" MONOLITHIC CURB AND 6" MONOLITHIC SPILL CURB, C.I.P.	4511.00	SY			0.00	0%	$ 57.00	$ -

DESCRIPTION	QUANTITY	UNIT	THIS ESTIMATE	PREVIOUS ESTIMATE	WORK TO DATE	%	UNIT PRICE	WORK TO DATE
29. 4" CONCRETE SIDEWALK, C.I.P.	76.00	SY			0.00	0%	$ 65.00	$ -
30. STANDARD CURB OUTFALL AT 6" CURB, C.I.P.	31.00	EA			0.00	0%	$ 150.00	$ -
STORM AND DRAINAGE								
31. 24" RCP TYPE III (STRUCTURAL BACK-FILL), C.I.P.	468.00	LF	137.00	185.00	322.00	69%	$ 95.00	$ 30,590.00
32. 30" RCP TYPE III (STRUCTURAL BACK-FILL), C.I.P.	23.00	LF	23.00		23.00	100%	$ 150.00	$ 3,450.00
33. 5' CURB INLET, TXDOT TYPE 2 - INSET (ON GRADE), C.I.P.	2.00	EA	4.00		4.00	200%	$ 5,000.00	$ 20,000.00
34. 10' CURB INLET, TXDOT TYPE 2 - INSET (ON GRADE), C.I.P.	6.00	EA		1.00	1.00	17%	$ 6,000.00	$ 6,000.00
35. EXISTING PRIVATE STORM SYSTEMS TO BE REPAIRED IF NECESSARY, UP TO R.O.W. (PIPE AND INLETS)	31.00	EA			0.00	0%	$ 200.00	$ -
36. CONNECT TO EXISTING 5'X5' RCBS, CORE AND GROUT CONNECTION	2.00	EA	2.00		2.00	100%	$ 2,500.00	$ 5,000.00
37. REPAIR OF CONCRETE CHANNEL WALL FOR RELOCATION OF 24" RCP OUTFALL	1.00	EA		1.00	1.00	100%	$ 5,000.00	$ 5,000.00
38. TRENCH SAFETY FOR PROPOSED STORM SEWER	491.00	LF	160.00	185.00	345.00	70%	$ 1.00	$ 345.00
WATER								
39. TRENCH SAFETY FOR PROPOSED WATER LINE	615.00	LF			0.00	0%	$ 1.00	$ -
40. 6" PVC C-900 DR18 WATER LINE, CIP	265.00	LF		20.00	20.00	8%	$ 71.00	$ 1,420.00
41. 6" PVC C-900 DR18 WATER LINE, STRUCTURAL BACKFILL, C.I.P.	224.00	LF			0.00	0%	$ 75.00	$ -
42. 8" PROPOSED WATER LINE CROSSING AT EXISTING 8" SANITARY SEWER LINE	1.00	EA			0.00	0%	$ 1,000.00	$ -
43. 8" PVC C-900 DR18 WATER LINE, CIP	350.00	LF		322.00	322.00	92%	$ 75.00	$ 24,150.00
44. 8" PVC C-900 DR18 WATER LINE, STRUCTURAL BACKFILL, C.I.P.	309.00	LF		138.00	138.00	45%	$ 80.00	$ 11,040.00

DESCRIPTION	QUANTITY	UNIT	THIS ESTIMATE	PREVIOUS ESTIMATE	WORK TO DATE	%	UNIT PRICE	WORK TO DATE
45. 8" 45 DEGREE BEND, C.I.P.	3.00	EA		1.00	1.00	33%	$ 350.00	$ 350.00
46. 8" 22.5 DEGREE BEND, C.I.P.	2.00	EA			0.00	0%	$ 350.00	$ -
47. 8"X 6" TEE, C.I.P.	1.00	EA		1.00	1.00	100%	$ 450.00	$ 450.00
48. 6"X6" TEE, C.I.P.	1.00	EA			0.00	0%	$ 450.00	$ -
49. 8" GATE VALVE AND BOX, C.I.P.	3.00	EA		2.00	2.00	67%	$ 2,250.00	$ 4,500.00
50. 8"X6" REDUCER, C.I.P.	1.00	EA		1.00	1.00	100%	$ 350.00	$ 350.00
51. 6" GATE VALVE AND BOX, C.I.P.	5.00	EA		2.00	2.00	40%	$ 1,750.00	$ 3,500.00
52. 6" 45 DEGREE BEND, C.I.P.	5.00	EA		3.00	3.00	60%	$ 250.00	$ 750.00
53. 6" 22.5 DEGREE BEND, C.I.P.	1.00	EA		1.00	1.00	100%	$ 250.00	$ 250.00
54. 6" 11.25 DEGREE BEND, C.I.P.	2.00	EA			0.00	0%	$ 250.00	$ -
55. STANDARD FIRE HYDRANT ASSEMBLY C.I.P.	1.00	EA		1.00	1.00	100%	$ 5,500.00	$ 5,500.00
56. NEW WATER LINE SHORT SERVICE AND RECONNECTION TO NEW METER VAULT (2-1" TAPS), C.I.P.	9.00	EA			0.00	0%	$ 1,500.00	$ -
57. NEW WATER LINE LONG SERVICE AND RECONNECTION TO NEW METER VAULT (1-2" TAP), C.I.P.	13.00	EA			0.00	0%	$ 2,000.00	$ -
58. NEW WATER METER VAULT, SIZED FOR TWO METERS	22.00	EA			0.00	0%	$ 300.00	$ -
59. CONNECT TO EXISTING 8" PVC WATER LINE	1.00	EA			0.00	0%	$ 1,250.00	$ -
60. CONNECT TO EXISTING 6" PVC WATER LINE	1.00	EA		1.00	1.00	100%	$ 1,000.00	$ 1,000.00
61. RELOCATE EXISTING FIRE HYDRANT	1.00	EA			0.00	0%	$ 1,500.00	$ -
SANITARY								
62. 8" PVC, SDR-26 SANITARY SEWER, C.I.P., BY OPEN CUT	48.00	LF			0.00	0%	$ 105.00	$ -
63. 8" HDPE DR-19 SANITARY SEWER BY PIPE BURSTING, C.I.P.	191.00	LF		197.00	197.00	103%	$ 107.50	$ 21,177.50

DESCRIPTION	QUANTITY	UNIT	THIS ESTIMATE	PREVIOUS ESTIMATE	WORK TO DATE	%	UNIT PRICE	WORK TO DATE
64. STANDARD 4' INSIDE DIA. SANITARY SEWER MANHOLE, C.I.P.	2.00	EA			0.00	0%	$ 3,750.00	$ -
65. EXISTING MANHOLE TO BE REHABILITATED LINE INTERIOR W/ RAVEN 405 LINING SYSTEM (125 MILS THICK, MINIMUM) AND REPLACE RING AND COVER	2.00	EA			0.00	0%	$ 2,000.00	$ -
66. 4" SANITARY SHORT SERVICE CONNECTION PROVIDE CLEANOUT AT R.O.W.	5.00	EA		3.00	3.00	60%	$ 1,450.00	$ 4,350.00
67. 8" SANITARY SEWER ACCESS CHAMBER	1.00	EA			0.00	0%	$ 1,750.00	$ -
68. POST CONSTRUCTION CCTV INSPECTION ON PIPE BURST SECTION (191 LF) AND SECTION REPAIRED BY OPEN CUT (48 LF)	1.00	LS			0.00	0%	$ 3,000.00	$ -
69. VACUUM TEST NEW SANITARY SEWER MANHOLE	2.00	EA			0.00	0%	$ 500.00	$ -
70. PIPE BURSTING MOBILIZATION	1.00	LS		1.00	1.00	100%	$ 3,750.00	$ 3,750.00
71. TRENCH SAFETY FOR PROPOSED SANITARY SEWER (OPEN CUT)	48.00	LF			0.00	0%	$ 5.00	$ -
CASH ALLOWANCE ITEMS								
72. FURNISH CONSTRUCTION MATERIALS TESTING, IN ACCORDANCE WITH PLANS AND SPECS.	1.00	LS	0.1402	0.0849	0.2251	23%	$ 30,000.00	$ 6,754.00
73. PAYMENT TO CENTERPOINT ENERGY FOR DECORATIVE STREET LIGHTING AND REMOVAL OF EXISTING STREET LIGHTS	1.00	LS		1.00	1.00	100%	$ 13,194.00	$ 13,194.00
74. 6" PVC C-900 DR18 WATER LINE, STRUCTURAL BACKFILL, C.I.P.	87.00	LF		60.00	60.00	69%	$ 75.00	$ 4,500.00
75. 8"X6" TEE , C.I.P.	1.00	EA		1.00	1.00	100%	$ 250.00	$ 250.00
76. 6" GATE VALVE AND BOX, C.I.P.	2.00	EA		2.00	2.00	100%	$ 1,500.00	$ 3,000.00
10 % CITY OF SPRING VALLEY VILLAGE CONTINGENCY	1.00	LS			0.00	0%	$ 99,571.25	$ -
TOTAL WORK TO DATE								**$ 295,958.00**

CONTRACT TIME:	220 CALENDAR DAYS
CONTRACT DATE:	8/25/2020
WORK ORDER DATE:	10/26/2020

CONTRACT AMOUNT:	$ 1,095,283.75
CHANGE ORDER:	
REVISED CONTRACT AMOUNT:	$ 1,095,283.75
TOTAL WORK TO DATE:	$ 295,958.00
MATERIALS ON SITE:	$ -
TOTAL:	$ 295,958.00
LESS RETAINAGE:	$ 29,595.80
LESS PREVIOUS PAYMENTS	$ 214,628.40
AMOUNT DUE FOR PAYMENT:	$ 51,733.80

AMOUNT EARNED THIS PERIOD	$ 57,482.00
LESS RETAINAGE THIS PERIOD	$ 5,748.20
AMOUNT DUE THIS PERIOD	$ 51,733.80

APPROVAL: _____
CONRAD CONSTRUCTION CO., LTD.

JAMES R. BOLIN
PROJECTS ADMINISTRATOR

Spring Valley Village City Council
Agenda Item Data Sheet

MEETING DATE:	February 23, 2021
TOPIC:	**Approval of Pay Estimate No. 4 for Green Valley Drive & Winningham Lane Pavement & Utility Improvements Project to Conrad Construction Co., LTD. in the Amount of $151,556.92**
BACKGROUND:	This is the fourth pay estimate to be submitted by Conrad Construction Co., LTD. for the Green Valley Drive & Winningham Lane Pavement & Utility Improvements Project (2020-07-100) for work completed on the Project from January 1, 2021, to January 31, 2021.
RECOMMENDATION:	Gessner Engineer Project Manager Sean Ray, ME, P.E. and City Staff have reviewed Pay Estimate No. 4 and recommend approval.
ATTACHMENTS:	• Pay Estimate No. 4 Submitted By Conrad Construction Co., LTD.
FUNDING ISSUES:	☐ Not applicable – no dollars are being spent or received. ☒ Full amount already budgeted in Acct/Project# 25-50-7518 ☐ Not budgeted, if approved, the following will be included in the next Budget Amendment: ☐ $_____ from Acct/Project# _____ will be transferred to Acct/Project# _____ ☐ _____ from unassigned fund balance will be used and added to Acct/Project# _____ ☐ $_____ will be added to Revenue Acct# __-____ and $_____ added to Expenditure Acct/Project# _____
FINANCE VERIFICATION OF FUNDING:	

SUBMITTING STAFF MEMBER:	**CITY ADMINISTRATOR APPROVAL:**
Pat Riley, Public Works Director	

DIVIDER PAGE

Cover Letter: Payment Application #4

RECEIVED
02-04-2021

GESSNER ENGINEERING

TO: **City of Spring Valley Village**
(Owner)

Contract: **Green Valley & Winningham Lane Roadway, Drainage, and Utility Improvements**
(Insert name of Contract as it appears in the Contract Documents)

Owner's Contract No. **2020-07-100**

Engineer: **Gessner Engineering**

Contractor: **Conrad Construction Co., LTD**

Conrad Construction Co., LTD has submitted **Payment Application #4** for work through **January 1, 2021 to January 31, 2021,** in the amount of **$151,556.92**. After review of work complete to date and material stored on-site, Gessner Engineering recommends the payment of **$151,556.92** to Conard Construction Co., LTD.

1.	Original Contract Amount:	$1,095,283.75
2.	Change Orders:	$0.00
3.	Total Current Contract Amount:	$1,095,283.75
4.	Construction Materials Testing to Date:	$9,329.00
5.	Payment to Centerpoint:	$13,194.00
6.	Total Value of Work Completed to Date:	$464,354.58
7.	Total Materials Stored to Date:	$0.00
8.	Total Completed & Stored to Date:	$464,354.58
9.	Retainage (10%):	$46,435.46
10.	Total Completed, Less Retainage:	$417,919.12
11.	Total Amount of Prior Payments:	$266,362.20
12.	Current Due Amount:	$151,556.92
13.	Total Balance Remaining (Including Retainage):	$677,364.63
14.	Notice to Proceed Date:	October 26, 2020
15.	Project Estimated Completion Date:	June 3, 2021

Cover Letter: Payment Application #4

GESSNER ENGINEERING

Recommend Payment:
See attached (Pay App)

Sean Ray, ME, PE
(ENGINEER)

PROJECT MANAGER
(TITLE)

Conrad Construction Co., Ltd.
P.O. Box 841134
Houston, Texas 77284

Project: Green Valley Dr. & Winningham Ln. , Project No. 2020-07-100

Pay Application No.	4	Work To Date:	$	464,354.58
Application Period	1-1-21 thru 1-31-21			
Original Contract Amount	$ 1,095,283.75			
Revised Contract Amount	$ -	Remaining Work	$	630,929.17
Notice To Proceed	10/26/2020			

Total Work To Date:	$	464,354.58
Materials Stored to Date	$	-
Total Work To Date & Stored Materials	$	464,354.58
Retainage (10%)	$	46,435.46
Total Work Complete, Less Retainage	$	417,919.12
Less Previous Payments	$	266,362.20
Total Due This Application	$	151,556.92

James R. Bolin
Conrad Const. Co., Ltd.

Sean Ray, M.E., P.E.
Engineer - Gessner Engineering

Pat Riley
Public Works Director
City of Spring Valley Village

CONTRACTOR'S AFFIDAVIT

OF BILLS PAID/LIEN RELEASE

OWNER : City of Spring Valley Village

PROJECT : Green Valley Dr. and Winningham Ln. – Reconstruction , Bid No. 2020-07-100

CONTRACTOR : Conrad Construction Co., Ltd.

I certify that all just and lawful bills against the below-named Contractor for labor, material and expendable equipment employed in the performance of said Contract for the period covering 1.1.21 through 1.31.21 have been paid in full. This is to certify that I am relieving the City of Spring Valley Village from any claims from debt occurring in connection with this project prior to 2.1.21 .

Firm: Conrad Construction Co., Ltd.

By : Brian Conrad

Date : 2.3.21

Title : Vice President

Signed and sworn to before me a Notary Public in and for Harris County, Texas this 3rd day of February , 2021 .

James R. Bolin

JAMES R. BOLIN
Notary Public, State of Texas
Comm. Expires 05-20-2024
Notary ID 10530801

Green Valley Drive and Winningham Lane – Project No. 2020-07-100

Conrad Construction Co., Ltd.

Pay Application No. : 4

Reporting Period : 1.1.21 thru 1.31.21

Subcontractor and Work Performed During This Period

Highway 1, LLC - Traffic Control maintenance

TCH Drilling - water line and appurtenances

Southern Crushed Concrete - Concrete pavement removal

FROM: CONRAD CONSTRUCTION CO.,LTD.
P.O. BOX 841134
HOUSTON, TEXAS 77284

TO: CITY OF SPRING VALLEY VILLAGE
ACCOUNTS PAYABLE
1025 CAMPBELL ROAD
HOUSTON,TEXAS 77055

ATTN: SEAN RAY, M.E., P.E. - PROJECT MANAGER
REF: GREEN VALLEY DR. AND WINNINGHAM LN.
PROJ #: BID NO. 2020-07-100 , CC# 20/0324
DATE: 1/31/2021

PAY APPLICATION # : 4

DESCRIPTION	QUANTITY	UNIT	THIS ESTIMATE	PREVIOUS ESTIMATE	WORK TO DATE	%	UNIT PRICE	WORK TO DATE
GENERAL ITEMS								
1. MOBILIZATION, BONDS & INSURANCE	1.00	LS		1.00	1.00	100%	$ 75,000.00	$ 75,000.00
2. TRAFFIC CONTROL FOR ALL PHASES	1.00	LS	0.13	0.51	0.64	64%	$ 45,000.00	$ 28,800.00
3. SODDING UP TO R.O.W.	32200.00	SF		450.00	450.00	1%	$ 0.75	$ 337.50
4. EROSION CONTROL (SWPPP)	1.00	LS	0.13	0.51	0.64	64%	$ 2,500.00	$ 1,600.00
5. TREE PROTECTION, C.I.P.	1.00	LS	0.13	0.51	0.64	64%	$ 7,500.00	$ 4,800.00
DEMOLITION								
6. DEMOLITION OF EXISTING ROADWAY PAVEMENT AND BASE MATERIAL, INCL. HAUL OFF	3851.00	SY	1366.57		1366.57	35%	$ 6.00	$ 8,199.42
7. DEMOLITION OF EXISTING DRIVEWAYS AND BASE MATERIAL, INCL. HAUL OFF	648.00	SY			0.00	0%	$ 7.00	$ -
8. DEMOLITION OF EXISTING SIDEWALK, INCL. HAUL OFF	70.00	SY			0.00	0%	$ 10.00	$ -
9. EXISTING LIGHT POLES TO BE TRANSPORTED TO AND FROM THE CITY OF SPRING VALLEY PUBLIC WORKS YARD, AFTER REMOVAL FROM CENTERPOINT ENERGY	1.00	LS	0.50		0.50	50%	$ 5,000.00	$ 2,500.00
10. EXISTING STREET/STOP SIGN TO BE SALVAGED AND REINSTALLED	3.00	EA			0.00	0%	$ 350.00	$ -
11. EXISTING 24" CMP STORM SEWER TO BE COMPLETELY REMOVED	69.00	LF		20.00	20.00	29%	$ 25.00	$ 500.00
12. EXIST. CURB INLET TO BE REMOVED	1.00	EA		1.00	1.00	100%	$ 650.00	$ 650.00

DESCRIPTION	QUANTITY	UNIT	THIS ESTIMATE	PREVIOUS ESTIMATE	WORK TO DATE	%	UNIT PRICE	WORK TO DATE
13. REMOVAL OF EXIST. TREES (5-14")	11.00	EA	2.00	8.00	10.00	91%	$ 650.00	$ 6,500.00
14. REMOVAL OF EXIST. TREES (15-25")	5.00	EA		3.00	3.00	60%	$ 1,200.00	$ 3,600.00
15. REMOVAL OF EXIST. TREES (SIZE 25" AND LARGER)	1.00	EA		1.00	1.00	100%	$ 2,000.00	$ 2,000.00
16. LANDSCAPED AREAS IN R.O.W. TO BE CLEARED	1.00	LS	1.00		1.00	100%	$ 1,500.00	$ 1,500.00
17. REMOVE EXISTING 6"X2" REDUCER	1.00	EA			0.00	0%	$ 500.00	$ -
18. REMOVE EXISTING 8"X6" REDUCER	1.00	EA			0.00	0%	$ 500.00	$ -
19. REMOVE EXISTING SANITARY SEWER MANHOLE	2.00	EA			0.00	0%	$ 750.00	$ -
20. REMOVE EXISTING 8" PVC SANITARY SEWER	48.00	LF			0.00	0%	$ 25.00	$ -
21. CAP EXISTING 2" WATERLINE	1.00	EA			0.00	0%	$ 750.00	$ -
22. REMOVE EXISTING 6" GATE VALVE AND BOX	1.00	EA			0.00	0%	$ 750.00	$ -
PAVEMENT AND EARTHWORK								
23. EARTHWORK - CUT TO FILL TO DESIGN GRADES (IN PLACE)	145.00	CY	44.00		44.00	30%	$ 20.00	$ 880.00
24. EARTHWORK - CUT TO HAUL TO DESIGN GRADES (IN PLACE)	85.00	CY	22.00		22.00	26%	$ 25.00	$ 550.00
25. LIME STABILIZATION OF SUBGRADE WITH COMPACTION (DOES NOT INCLUDE COST OF LIME)	4987.00	SY	1426.65		1426.65	29%	$ 4.00	$ 5,706.60
26. LIME FOR STABILIZATION OF SUBGRADE WITH COMPACTION (ASSUME 6% BY WEIGHT)	108.00	TON	19.81		19.81	18%	$ 190.00	$ 3,763.90
27. 6" CRUSHED LIMESTONE BASE TXDOT ITEM 247 TYPE A, GRADES 1 OR 2	4142.00	SY			0.00	0%	$ 21.50	$ -
28. 6" CONCRETE PAVEMENT FOR ROAD-WAY AND DRIVEWAYS, INCLUDING 6" MONOLITHIC CURB AND 6" MONOLITHIC SPILL CURB, C.I.P.	4511.00	SY	660.38		660.38	15%	$ 57.00	$ 37,641.66

DESCRIPTION	QUANTITY	UNIT	THIS ESTIMATE	PREVIOUS ESTIMATE	WORK TO DATE	%	UNIT PRICE	WORK TO DATE
29. 4" CONCRETE SIDEWALK, C.I.P.	76.00	SY			0.00	0%	$ 65.00	$ -
30. STANDARD CURB OUTFALL AT 6" CURB, C.I.P.	31.00	EA			0.00	0%	$ 150.00	$ -
STORM AND DRAINAGE								
31. 24" RCP TYPE III (STRUCTURAL BACK-FILL), C.I.P.	468.00	LF	140.00	322.00	462.00	99%	$ 95.00	$ 43,890.00
32. 30" RCP TYPE III (STRUCTURAL BACK-FILL), C.I.P.	23.00	LF		23.00	23.00	100%	$ 150.00	$ 3,450.00
33. 5' CURB INLET, TXDOT TYPE 2 - INSET (ON GRADE), C.I.P.	2.00	EA	3.00	4.00	7.00	350%	$ 5,000.00	$ 35,000.00
34. 10' CURB INLET, TXDOT TYPE 2 - INSET (ON GRADE), C.I.P.	6.00	EA		1.00	1.00	17%	$ 6,000.00	$ 6,000.00
35. EXISTING PRIVATE STORM SYSTEMS TO BE REPAIRED IF NECESSARY, UP TO R.O.W. (PIPE AND INLETS)	31.00	EA			0.00	0%	$ 200.00	$ -
36. CONNECT TO EXISTING 5'X5' RCBS, CORE AND GROUT CONNECTION	2.00	EA		2.00	2.00	100%	$ 2,500.00	$ 5,000.00
37. REPAIR OF CONCRETE CHANNEL WALL FOR RELOCATION OF 24" RCP OUTFALL	1.00	EA		1.00	1.00	100%	$ 5,000.00	$ 5,000.00
38. TRENCH SAFETY FOR PROPOSED STORM SEWER	491.00	LF	140.00	345.00	485.00	99%	$ 1.00	$ 485.00
WATER								
39. TRENCH SAFETY FOR PROPOSED WATER LINE	615.00	LF	615.00		615.00	100%	$ 1.00	$ 615.00
40. 6" PVC C-900 DR18 WATER LINE, CIP	265.00	LF	245.00	20.00	265.00	100%	$ 71.00	$ 18,815.00
41. 6" PVC C-900 DR18 WATER LINE, STRUCTURAL BACKFILL, C.I.P.	224.00	LF	224.00		224.00	100%	$ 75.00	$ 16,800.00
42. 8" PROPOSED WATER LINE CROSSING AT EXISTING 8" SANITARY SEWER LINE	1.00	EA	1.00		1.00	100%	$ 1,000.00	$ 1,000.00
43. 8" PVC C-900 DR18 WATER LINE, CIP	350.00	LF	28.00	322.00	350.00	100%	$ 75.00	$ 26,250.00
44. 8" PVC C-900 DR18 WATER LINE, STRUCTURAL BACKFILL, C.I.P.	309.00	LF	171.00	138.00	309.00	100%	$ 80.00	$ 24,720.00

DESCRIPTION	QUANTITY	UNIT	THIS ESTIMATE	PREVIOUS ESTIMATE	WORK TO DATE	%	UNIT PRICE	WORK TO DATE
45. 8" 45 DEGREE BEND, C.I.P.	3.00	EA	2.00	1.00	3.00	100%	$ 350.00	$ 1,050.00
46. 8" 22.5 DEGREE BEND, C.I.P.	2.00	EA	2.00		2.00	100%	$ 350.00	$ 700.00
47. 8"X 6" TEE, C.I.P.	1.00	EA		1.00	1.00	100%	$ 450.00	$ 450.00
48. 6"X6" TEE, C.I.P.	1.00	EA	1.00		1.00	100%	$ 450.00	$ 450.00
49. 8" GATE VALVE AND BOX, C.I.P.	3.00	EA	1.00	2.00	3.00	100%	$ 2,250.00	$ 6,750.00
50. 8"X6" REDUCER, C.I.P.	1.00	EA		1.00	1.00	100%	$ 350.00	$ 350.00
51. 6" GATE VALVE AND BOX, C.I.P.	5.00	EA	3.00	2.00	5.00	100%	$ 1,750.00	$ 8,750.00
52. 6" 45 DEGREE BEND, C.I.P.	5.00	EA	1.00	3.00	4.00	80%	$ 250.00	$ 1,000.00
53. 6" 22.5 DEGREE BEND, C.I.P.	1.00	EA		1.00	1.00	100%	$ 250.00	$ 250.00
54. 6" 11.25 DEGREE BEND, C.I.P.	2.00	EA			0.00	0%	$ 250.00	$ -
55. STANDARD FIRE HYDRANT ASSEMBLY C.I.P.	1.00	EA	1.00	1.00	2.00	200%	$ 5,500.00	$ 11,000.00
56. NEW WATER LINE SHORT SERVICE AND RECONNECTION TO NEW METER VAULT (2-1" TAPS), C.I.P.	9.00	EA			0.00	0%	$ 1,500.00	$ -
57. NEW WATER LINE LONG SERVICE AND RECONNECTION TO NEW METER VAULT (1-2" TAP), C.I.P.	13.00	EA			0.00	0%	$ 2,000.00	$ -
58. NEW WATER METER VAULT, SIZED FOR TWO METERS	22.00	EA			0.00	0%	$ 300.00	$ -
59. CONNECT TO EXISTING 8" PVC WATER LINE	1.00	EA			0.00	0%	$ 1,250.00	$ -
60. CONNECT TO EXISTING 6" PVC WATER LINE	1.00	EA		1.00	1.00	100%	$ 1,000.00	$ 1,000.00
61. RELOCATE EXISTING FIRE HYDRANT	1.00	EA	1.00		1.00	100%	$ 1,500.00	$ 1,500.00
SANITARY								
62. 8" PVC, SDR-26 SANITARY SEWER, C.I.P., BY OPEN CUT	48.00	LF			0.00	0%	$ 105.00	$ -
63. 8" HDPE DR-19 SANITARY SEWER BY PIPE BURSTING, C.I.P.	191.00	LF		197.00	197.00	103%	$ 107.50	$ 21,177.50

DESCRIPTION	QUANTITY	UNIT	THIS ESTIMATE	PREVIOUS ESTIMATE	WORK TO DATE	%	UNIT PRICE	WORK TO DATE
64. STANDARD 4' INSIDE DIA. SANITARY SEWER MANHOLE, C.I.P.	2.00	EA			0.00	0%	$ 3,750.00	$ -
65. EXISTING MANHOLE TO BE REHABILITATED LINE INTERIOR W/ RAVEN 405 LINING SYSTEM (125 MILS THICK, MINIMUM) AND REPLACE RING AND COVER	2.00	EA			0.00	0%	$ 2,000.00	$ -
66. 4" SANITARY SHORT SERVICE CONNECTION PROVIDE CLEANOUT AT R.O.W.	5.00	EA		3.00	3.00	60%	$ 1,450.00	$ 4,350.00
67. 8" SANITARY SEWER ACCESS CHAMBER	1.00	EA			0.00	0%	$ 1,750.00	$ -
68. POST CONSTRUCTION CCTV INSPECTION ON PIPE BURST SECTION (191 LF) AND SECTION REPAIRED BY OPEN CUT (48 LF)	1.00	LS			0.00	0%	$ 3,000.00	$ -
69. VACUUM TEST NEW SANITARY SEWER MANHOLE	2.00	EA			0.00	0%	$ 500.00	$ -
70. PIPE BURSTING MOBILIZATION	1.00	LS		1.00	1.00	100%	$ 3,750.00	$ 3,750.00
71. TRENCH SAFETY FOR PROPOSED SANITARY SEWER (OPEN CUT)	48.00	LF			0.00	0%	$ 5.00	$ -
CASH ALLOWANCE ITEMS								
72. FURNISH CONSTRUCTION MATERIALS TESTING, IN ACCORDANCE WITH PLANS AND SPECS.	1.00	LS	0.0858	0.2251	0.3109	31%	$ 30,000.00	$ 9,329.00
73. PAYMENT TO CENTERPOINT ENERGY FOR DECORATIVE STREET LIGHTING AND REMOVAL OF EXISTING STREET LIGHTS	1.00	LS		1.00	1.00	100%	$ 13,194.00	$ 13,194.00
74. 6" PVC C-900 DR18 WATER LINE, STRUCTURAL BACKFILL, C.I.P.	87.00	LF		60.00	60.00	69%	$ 75.00	$ 4,500.00
75. 8"X6" TEE , C.I.P.	1.00	EA		1.00	1.00	100%	$ 250.00	$ 250.00
76. 6" GATE VALVE AND BOX, C.I.P.	2.00	EA		2.00	2.00	100%	$ 1,500.00	$ 3,000.00
10 % CITY OF SPRING VALLEY VILLAGE CONTINGENCY	1.00	LS			0.00	0%	$ 99,571.25	$ -
TOTAL WORK TO DATE								**$ 464,354.58**

CONTRACT TIME:	220 CALENDAR DAYS
CONTRACT DATE:	8/25/2020
WORK ORDER DATE:	10/26/2020

CONTRACT AMOUNT:	$ 1,095,283.75
CHANGE ORDER:	
REVISED CONTRACT AMOUNT:	$ 1,095,283.75
TOTAL WORK TO DATE:	$ 464,354.58
MATERIALS ON SITE:	$ -
TOTAL:	$ 464,354.58
LESS RETAINAGE:	$ 46,435.46
LESS PREVIOUS PAYMENTS	$ 266,362.20
AMOUNT DUE FOR PAYMENT:	$ 151,556.92

AMOUNT EARNED THIS PERIOD	$ 168,396.58
LESS RETAINAGE THIS PERIOD	$ 16,839.66
AMOUNT DUE THIS PERIOD	$ 151,556.92

APPROVAL: _____
CONRAD CONSTRUCTION CO., LTD.

JAMES R. BOLIN
PROJECTS ADMINISTRATOR

INVOICE

Invoice Date: 01/25/2021
Invoice No: 21-1-000012

RECEIVED
02-04-2021

GESSNER ENGINEERING

Client Address: Conrad Construction Co., LTD
Brian Conrad, Vice President
PO Box 841134

Houston, TX. 77284 USA

Cust No: 215422
Project No: 19-1148-02
Project Desc.: Green Valley Drive & Winningham Lane Project
Spring Valley Village, Texas

========== Invoice Summary by Billing Code ==========

	Unit Rate	Qty	Extension
E-001 - In-Place Nuclear Density (ASTM D6938)	$20.00	20.00	$400.00
E-002 - Atterberg Limits (ASTM D4318)	$75.00	2.00	$150.00
E-003 - Percent Passing No. 200 Sieve (ASTM D1140)	$20.00	2.00	$40.00
E-029 - Soil Sample Pickup, per hour (Minimum $30)	$60.00	4.00	$240.00
E-032 - Round Trip Travel Fee, per hour	$60.00	12.50	$750.00
L-002 - CMT Project Manager	$100.00	1.50	$150.00
L-011 - Technician	$52.00	16.25	$845.00
		Total for this Invoice:	**$2,575.00**

========== Invoice Detail by Report ==========

Lab No.	Sampled	Qty	Billing Code	Unit Type	Unit Rate	Extension
10264-1	*01/04/2021*	*4.00*	*E-001 - In-Place Nuclear Density (ASTM D6938)*	*ea*	*$20.00*	*$80.00*
10264-1	*01/04/2021*	*2.50*	*E-032 - Round Trip Travel Fee, per hour*	*hr*	*$60.00*	*$150.00*
10264-1	*01/04/2021*	*0.25*	*L-002 - CMT Project Manager*	*hr*	*$100.00*	*$25.00*
10264-1	*01/04/2021*	*4.75*	*L-011 - Technician*	*hr*	*$52.00*	*$247.00*
				Lab Number 10264-1 for a Subtotal of:		*$502.00*
10420-1	*01/05/2021*	*4.00*	*E-001 - In-Place Nuclear Density (ASTM D6938)*	*ea*	*$20.00*	*$80.00*
10420-1	*01/05/2021*	*2.50*	*E-032 - Round Trip Travel Fee, per hour*	*hr*	*$60.00*	*$150.00*
10420-1	*01/05/2021*	*0.25*	*L-002 - CMT Project Manager*	*hr*	*$100.00*	*$25.00*
10420-1	*01/05/2021*	*4.00*	*L-011 - Technician*	*hr*	*$52.00*	*$208.00*
				Lab Number 10420-1 for a Subtotal of:		*$463.00*
10427-1	*01/06/2021*	*4.00*	*E-001 - In-Place Nuclear Density (ASTM D6938)*	*ea*	*$20.00*	*$80.00*

REMIT TO: **2501 Ashford Drive**
College Station, TX 77840
1-877-GESSNER
ar@gessnereng.com

Due Upon Receipt
Late payments are subject to 18% annual finance charges. Unpaid invoices will be sent to collection.

We accept EFT's with no fee and Credit Card Payments with a 3% Convenience Fee
https://www.gessnerengineering.com/invoice/

INVOICE

Invoice Date: 01/25/2021
Invoice No: 21-1-000012

GESSNER ENGINEERING

========== Invoice Detail by Report ==========

Lab No.	Sampled	Qty	Billing Code	Unit Type	Unit Rate	Extension
10427-1	01/06/2021	2.50	E-032 - Round Trip Travel Fee, per hour	hr	$60.00	$150.00
10427-1	01/06/2021	0.25	L-002 - CMT Project Manager	hr	$100.00	$25.00
10427-1	01/06/2021	1.75	L-011 - Technician	hr	$52.00	$91.00
				Lab Number 10427-1 for a Subtotal of:		$346.00
10456-1	01/08/2021	4.00	E-001 - In-Place Nuclear Density (ASTM D6938)	ea	$20.00	$80.00
10456-1	01/08/2021	2.50	E-032 - Round Trip Travel Fee, per hour	hr	$60.00	$150.00
10456-1	01/08/2021	0.25	L-002 - CMT Project Manager	hr	$100.00	$25.00
10456-1	01/08/2021	0.50	L-011 - Technician	hr	$52.00	$26.00
				Lab Number 10456-1 for a Subtotal of:		$281.00
10572-1	01/12/2021	4.00	E-001 - In-Place Nuclear Density (ASTM D6938)	ea	$20.00	$80.00
10572-1	01/12/2021	2.50	E-032 - Round Trip Travel Fee, per hour	hr	$60.00	$150.00
10572-1	01/12/2021	0.25	L-002 - CMT Project Manager	hr	$100.00	$25.00
10572-1	01/12/2021	5.25	L-011 - Technician	hr	$52.00	$273.00
				Lab Number 10572-1 for a Subtotal of:		$528.00
10592-1	01/14/2021	4.00	E-029 - Soil Sample Pickup, per hour (Minimum $30)	hr	$60.00	$240.00
				Lab Number 10592-1 for a Subtotal of:		$240.00
10627	01/14/2021	2.00	E-002 - Atterberg Limits (ASTM D4318)	ea	$75.00	$150.00
10627	01/14/2021	2.00	E-003 - Percent Passing No. 200 Sieve (ASTM D1140)	ea	$20.00	$40.00
10627	01/14/2021	0.25	L-002 - CMT Project Manager	hr	$100.00	$25.00
				Lab Number 10627 for a Subtotal of:		$215.00
					Total for this Invoice:	**$2,575.00**

PRC ____ VENDOR ____
RB ____ JOB 200324
BC ____ GL ____
DON ____
JAKE ____ ENTERED ____

REMIT TO: 2501 Ashford Drive
College Station, TX 77840
1-877-GESSNER
ar@gessnereng.com

Due Upon Receipt
Late payments are subject to 18% annual finance charges. Unpaid invoices will be sent to collection.

We accept EFT's with no fee and Credit Card Payments with a 3% Convenience Fee
https://www.gessnerengineering.com/invoice/

Conrad Construction Co., Ltd. | Green Valley Dr. & Winningham Ln. | 2020-07-100

ID	Task Name	Duration	Start	Finish
1	Preconstruction Meeting	1d	9/25/20	9/25/20
2	Submittal Review	9d	9/28/20	10/8/20
3	Notice To Proceed	1d	10/26/20	10/26/20
4	Mobilization/Construction Staking	5d	10/26/20	10/30/20
5	Traffic Control / Tree Protection / SWPPP	166d	10/26/20	6/14/21
6	Sprinkler Relocations / Plan Revisions	10d	11/2/20	11/13/20
7	Water Line & Services (Winningham / Green Valley)	31d	11/11/20	12/23/20
8	Phase 1 - Winningham - Storm Sewer & Paving	42d	11/12/20	1/8/21
9	Phase 2 - Winningham - Storm Sewer & Paving	25d	1/11/21	2/12/21
10	Phase 3 - Green Valley - Storm Sewer & Paving	43d	1/20/21	3/19/21
11	Phase 4 - Green Valley - Storm Sewer & Paving	25d	3/22/21	4/23/21
12	Phase 5 - Winningham - Storm Sewer & Paving	15d	4/26/21	5/14/21
13	Phase 6 - Green Valley - Storm Sewer & Paving	15d	5/17/21	6/4/21
14	Restoration / Sodding / Clean Up / Demobilize	10d	6/7/21	6/18/21
15	Project Complete	0d	6/18/21	6/18/21

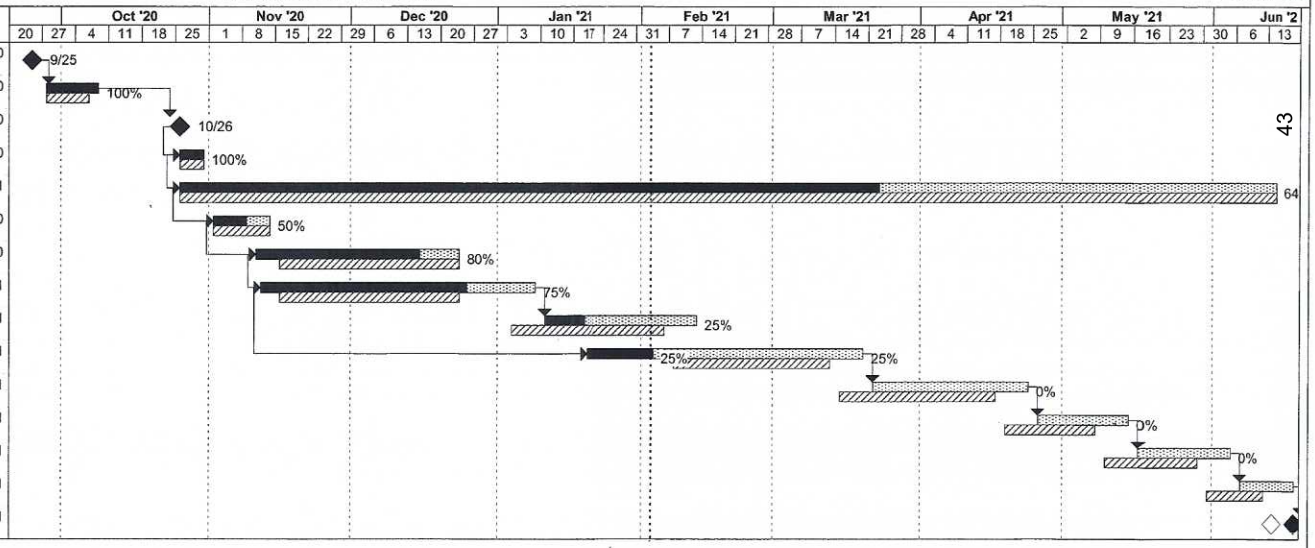

43

RECEIVED
02-04-2021

Project: Green Valley & Winningham
Date: 2/3/21

Critical		Task Progress		Milestone		Rolled Up Critical Progress		Rolled Up Baseline	
Critical Progress		Baseline		Summary		Rolled Up Task		Rolled Up Baseline Milestone	
Task		Baseline Milestone		Rolled Up Critical		Rolled Up Task Progress		Rolled Up Milestone	

MEETING DATE: February 23, 2021

TOPIC: **Resolution No. 21-XX**

A RESOLUTION OF THE CITY COUNCIL OF THE CITY OF SPRING VALLEY VILLAGE, TEXAS, APPROVING THE TERMS AND CONDITIONS OF CHANGE ORDER NUMBER 1 TO THE AGREEMENT BY AND BETWEEN THE CITY OF SPRING VALLEY VILLAGE, TEXAS AND CONRAD CONSTRUCTION, LTD., FOR GREEN VALLEY & WINNINGHAM PAVEMENT & UTILITY IMPROVEMENTS PROJECT; PROVIDING FOR THE INCORPORATION OF PREAMBLE; AUTHORIZING THE MAYOR TO EXECUTE ANY AND ALL DOCUMENTS NECESSARY TO EFFECTUATE SUCH AGREEMENT; AND PROVIDING AN EFFECTIVE DATE.

BACKGROUND: The City of Spring Valley Village entered into a contract with Conrad Construction, Ltd. on August 25, 2020, for the Green Valley Drive & Winningham Lane Pavement & Utility Project ("Contract"). The Notice to Proceed was issued for this Project on October 26, 2020.

Change Order Number 1 to the Contract includes a reduction resulting from a design revision related to the existing pavement and base material, an increase for addressing private irrigation systems that were located within the right-of-way, an increase for flexible base to be used for installing temporary driveways for residents during the Project, and an increase for the installation of street light conduit and pull boxes.

1. RFP #1 – Design Changes per RFI #1: Total reduction of ($63,293.00)
2. RFP #2 – Irrigation Systems located within ROW per RFI #2 : Total increase of $7,500.00
3. RFP #3 – Temporary Driveways per RFI #3: Total increase of $11,500.00
4. RFP #4 – Addition of 1,040 LF of 2" PVC streetlight conduit and 4 EA 2' Pull Boxes: Total increase of $23,782.00

If approved, Change Order No. 1 will <u>decrease</u> the Original Contract Amount by $19,011.00 for a new total Contract Amount of $1,076,272.75.

RECOMMENDATION: Gessner Engineering and Public Works Director Pat Riley have reviewed Change Order No. 1 and recommend approval of the Resolution.

ATTACHMENTS:
- Resolution Number 21-XX

FUNDING ISSUES: ☐ Not applicable – no dollars are being spent or received.

☒ Full amount already budgeted in Acct/Project# __25-50-7518____

☐ Not budgeted, if approved, the following will be included in the next Budget Amendment:

- ☐ $_____ from Acct/Project# _____ will be transferred to Acct/Project# _____
- ☐ $_____ from unassigned fund balance will be used and added to Acct/Project# _____
- ☐ $_____ will be added to Revenue Acct# __-____ and $_____ added to Expenditure Acct/Project# _____

FINANCE VERIFICATION OF FUNDING:

SUBMITTING STAFF MEMBER:	**CITY ADMINISTRATOR APPROVAL:**
Pat Riley, Public Works Director	

RESOLUTION NUMBER 21-XX

A RESOLUTION OF THE CITY COUNCIL OF THE CITY OF SPRING VALLEY VILLAGE, TEXAS, APPROVING THE TERMS AND CONDITIONS OF CHANGE ORDER NUMBER 1 TO THE AGREEMENT BY AND BETWEEN THE CITY OF SPRING VALLEY VILLAGE, TEXAS AND CONRAD CONSTRUCTION, LTD., FOR GREEN VALLEY & WINNINGHAM PAVEMENT & UTILITY IMPROVEMENTS PROJECT; PROVIDING FOR THE INCORPORATION OF PREAMBLE; AUTHORIZING THE MAYOR TO EXECUTE ANY AND ALL DOCUMENTS NECESSARY TO EFFECTUATE SUCH AGREEMENT; AND PROVIDING AN EFFECTIVE DATE.

WHEREAS, the City Council has been presented a proposed Change Order Number 1 to the Agreement by and between the City of Spring Valley Village, Texas and Conrad Construction, LTD. for the Green Valley & Winningham Pavement & Utility Improvements Project ("Change Order Number 1"), a copy of which is attached hereto as Exhibit "A" and incorporated herein by reference; and

WHEREAS, upon full review and consideration of Change Order Number 1 and all matters attendant and related thereto, the City Council is of the opinion that the terms and conditions thereof should be approved, and that the Mayor should be authorized to execute Change Order Number 1 and any and all documents necessary to effectuate such Change Order Number 1 on behalf of the City of Spring Valley Village.

NOW, THEREFORE, BE IT RESOLVED BY THE CITY COUNCIL OF THE CITY OF SPRING VALLEY VILLAGE, TEXAS, THAT:

Section 1. The facts and matters set forth in the preamble of this Resolution are hereby found to be true and correct and are incorporated herein and made a part hereof for all purposes.

Section 2. The terms and conditions of Change Order Number 1, having been reviewed by the City Council of the City of Spring Valley Village and found to be acceptable and in the best interests of the City of Spring Valley Village and its citizens, are hereby in all things approved.

Section 3. The Mayor is hereby authorized to execute Change Order Number 1 and empowered, for and on behalf of the City, to take all such actions and to execute, verify, acknowledge, certify to, file and deliver all such instruments and documents required in Change Order Number 1 as shall in the judgment of the Mayor be appropriate in order to effect the purposes of the foregoing resolution and Change Order Number 1.

Section 4. This Resolution shall become effective immediately upon its passage.

DULY PASSED AND APPROVED on this the 23rd day of February, 2021.

_____
Marcus Vajdos, Mayor
City of Spring Valley Village, Texas

ATTEST:

_____
Roxanne Benitez, City Secretary
City of Spring Valley Village, Texas

EXHIBIT “A”

TO

RESOLUTION NUMBER 21-XX

RECEIVED
1-22-2021

GESSNER
ENGINEERING

January 25, 2021

Mr. Pat Riley
City of Spring Valley Village - Public Works Director
1025 Campell Road
Houston, Texas 77055-7495

Re: Change Order No.: 1
Green Valley Drive and Winningham Lane Roadway, Drainage, and Utility Improvements
City of Spring Valley Village, TX
Contract No.: 2020-07-100
Gessner Engineering Job No.: 19-1148

Dear Mr. Riley:

Please find attached proposed Change Order Number 1 for the above referenced project. Change Order Number 1 is an aggregation of 4 requests for proposals by Conrad Construction Co., Ltd. Below is a breakdown for each:

1. RFP #1 – Design Changes per RFI #1: Total reduction of $63,293.00
2. RFP #2 – Irrigation Systems located withing ROW per RFI #2 : Total increase of $7,500.00
3. RFP #3 – Temporary Driveways per RFI #3: Total increase of $11,500.00
4. RFP #4 – Addition of 1,040 LF of 2" PVC streetlight conduit and 4 EA 2' Pull Boxes: Total increase of $23,782.00

Net Total Decrease with this Change Order: $19,011.00

A quantity breakdown and Backup information for each items is attached to Change Order Number 1.

Gessner Engineering has reviewed this change order and recommends approval. If we may be of further assistance, or if you have any questions please contact us at your convenience.

Sincerely,

GESSNER ENGINEERING, F-7451

Sean Ray, M.E., P.E.

Change Order No. 1

Date of Issuance: 1/25/21

Effective Date:

Owner: City of Spring Valley Village, Texas

Owner's Contract No.: 2020-07-100

Contractor: Conrad Construction Co., Ltd.

Engineer's Project No.: 19-1148

Project: Green Valley & Winningham Lane Roadway, Drainage, and Utility Improvements

The Contract is modified as follows upon execution of this Change Order:

Description:

Attachments: Narrative, Item and Quantity Changes, Conrad Construction RFPs

CHANGE IN CONTRACT PRICE	CHANGE IN CONTRACT TIMES
Original Contract Price: $ 1,095,283.75	Original Contract Times: Substantial Completion: 220 Ready for Final Payment: 30 Days
Change from previously approved Change Orders No. N/A to No. N/A: $ 0.00	Change from previously approved Change Orders No. N/A to No. N/A: Substantial Completion: 0 Ready for Final Payment: 0 days
Contract Price prior to this Change Order: $ 1,095,283.75	Contract Times prior to this Change Order: Substantial Completion: 220 Ready for Final Payment: 30 days or dates
Decrease of this Change Order: $ 19,011.00	Change of this Change Order: Substantial Completion: 0 Ready for Final Payment: 0 days
Contract Price incorporating this Change Order: $ 1,076272.75	Contract Times with all approved Change Orders: Substantial Completion: 220 Ready for Final Payment: 30 days

APPROVED:

By: _____

Owner (Authorized Signature)

Title: _____

Date: _____

ACCEPTED:

By: _____

Contractor (Authorized Signature)

Title: _____

Date: _____

RECOMMENDED:

By: _____

Title: Project Manager

Date: 1/25/2021

Item	Description	Unit	Bid Qty	Bid Unit Price	CO #1 Qty	CO #1 Unit Price	CO #1 Total Amount	CO #1 Comments	Qty Change	Amount Change
301	Earthwork- Cut to Haul Design Grades (In Place)	SY	85	$ 25.00	140	$ 25.00	$ 3,500.00	Additional Earthwork (cut to haul)	140	$ 3,500.00
304	6" Crushed Limestone Base Base TxDOT Item 247 Type A, Grades 1 or 2	SY	4142	$ 21.50	-4142	$ 21.50	$ (89,053.00)	Eliminate limestone base	-4142	$ (89,053.00)
305	6" Concrete Pavement for Roadway and Driveways, Including 6" Monolithic Curb and 6" Monolithic Spill Curb, C.I.P.	SY	4511	$ 57.00	-3710	$ 57.00	$ (211,470.00)	Deduct 6" concrete Paving	-3710	$ (211,470.00)
CO 1-1	Add 7" Concrete Paving	SY	0	$ 63.00	3710	$ 63.00	$ 233,730.00	Add as item 705	3710	$ 233,730.00
CO 1-2	Relocate, Replace, or repair Private Irrigation system located within the ROW for Each Parcel Distrubed	EA	0	$ 500.00	15	$ 500.00	$ 7,500.00	Add as item 706	15	$ 7,500.00
CO 1-3	Flexible Base Course for Temporary Driveways	EA	0	$ 500.00	26	$ 500.00	$ 13,000.00	Add as item 707	26	$ 13,000.00
CO 1-4	2" pvc Streetlight Conduit	LF	0	$ 19.55	1040	$ 19.55	$ 20,332.00	Add as item 708	1040	$ 20,332.00
CO 1-5	Pull Boxes	EA	0	$ 4.00	862.5	$ 4.00	$ 3,450.00	Add as item 709	862.5	$ 3,450.00
	TOTAL CHANGE ORDER						$ (19,011.00)			$ (19,011.00)

CONRAD CONSTRUCTION CO., LTD

Phone: (713) 937-3081 Fax (713) 937-1172
brianwconrad@hotmail.com

RFP 1 (REVISED)
Per RFI 1 design changes

Add 7" concrete paving	3710 SY x $63.00 = $233,730.00
Deduct 6" concrete paving	3710 SY x $57.00 = $211,470.00
Additional Earthwork (cut to haul) #301	140 CY x $25.00 = $3,500.00
Eliminate 6" limestone base	4142 SY x $21.50 = $89,053.00

Net deduct = -$63,293 to contract

Brian Conrad
Vice President
Conrad Construction Co., LTD

RFI #1

Gessner Engineering - College Station
2501 Ashford Drive
College Station, Texas 77840
Phone: (979) 680-8840

Project: 19-1148 - Green Valley & Winningham (W of Voss)
8800 Winningham Lane
Spring Valley Village, Texas 77055

Existing Pavement and Base Material

TO:	Sean Ray **(Gessner Engineering)**	**FROM:**	Brian Conrad **(Conrad Construction Co., Ltd.)** 13408 Emmett Road Houston, Texas 77041
DATE INITIATED:	12/28/2020	**STATUS:**	Closed on 01/08/21
LOCATION:	Winningham Lane	**DUE DATE:**	12/31/2020
PROJECT STAGE:	Construction	**COST CODE:**	
COST IMPACT:	TBD	**SCHEDULE IMPACT:**	TBD
DRAWING NUMBER:		**SPEC SECTION:**	
LINKED DRAWINGS:		**REFERENCE:**	

RECEIVED FROM: Brian Conrad **(Conrad Construction Co., Ltd.)**

COPIES TO:
Ric Bolin **(Conrad Construction Co., Ltd.)**, Brian Conrad **(Conrad Construction Co., Ltd.)**, Steven Conrad **(Conrad Construction Co., Ltd.)**, Sean Ray **(Gessner Engineering)**, Pedro Rico **(Gessner Engineering)**, Pat Riley **(Spring Valley Village)**, Luciuo Vasquez **(Project Surveillance, Inc.)**

Question from Brian Conrad (Conrad Construction Co., Ltd.) at 11:15 AM on 12/18/2020

After removing a few portions of pavement it is apparent that there is no existing limestone base under the existing pavement. We plan to begin removing pavement and working on subgrade and proposed pavement in early January. Are there going to be any changes to proposed design for pavement and subgrade on this project or continue and build as per plans?

Official Response: **Sean Ray (Gessner Engineering)** *responded on Friday, January 8th, 2021 at 8:01AM CST*

Revised Drawings.

Attachments:
19-1148 GREEN VALLEY & WINNINGHAM - REV02 RFI01.pdf

Official Response: **Sean Ray (Gessner Engineering)** *responded on Monday, December 28th, 2020 at 1:43PM CST*

An alternative to the current proposed section (6" concrete pavement, 6" crushed limestone, and 8" lime treated subgrade) would be:

- 7" Concrete Pavement
- 8" Lime Treated Subgrade

In order to achieve this:

- Remove excising concrete
- Remove existing subgrade as needed to achieve grades for new pavement thickness
- Proof roll subgrade and replace weak spots as needed
- Stabilize subgrade
- install 7" concrete pavement

Price additional 1" concrete for discussion and price reduction for not hauling off base material.

Attachments:

BY	DATE	COPIES TO

CONRAD CONSTRUCTION CO., LTD

Phone: (713) 937-3081 Fax (713) 937-1172
brianwconrad@hotmail.com

RFP 2
(Per RFI 2)

Relocate, Replace, or Repair Private Irrigation Systems Located within the ROW, for Each Parcel Disturbed

(Estimated Quantity)

15 EA x $500.00 = $7500.00

Brian Conrad
Vice President
Conrad Construction Co., LTD

RFI #2

GESSNER ENGINEERING

Gessner Engineering - College Station
2501 Ashford Drive
College Station, Texas 77840
Phone: (979) 680-8840

Project: 19-1148 - Green Valley & Winningham (W of Voss)
8800 Winningham Lane
Spring Valley Village, Texas 77055

Private Irrigation work within ROW

TO:	Sean Ray **(Gessner Engineering)**	**FROM:**	Brian Conrad **(Conrad Construction Co., Ltd.)** 13408 Emmett Road Houston, Texas 77041
DATE INITIATED:	01/06/2021		
LOCATION:	Winningham Lane	**STATUS:**	Closed on 01/08/21
PROJECT STAGE:		**DUE DATE:**	01/12/2021
COST IMPACT:	$500.00	**COST CODE:**	
DRAWING NUMBER:		**SCHEDULE IMPACT:**	Yes (Unknown)
LINKED DRAWINGS:		**SPEC SECTION:**	
		REFERENCE:	
RECEIVED FROM:	Brian Conrad **(Conrad Construction Co., Ltd.)**		

COPIES TO:
Brian Conrad **(Conrad Construction Co., Ltd.)**, Steven Conrad **(Conrad Construction Co., Ltd.)**, Sean Ray **(Gessner Engineering)**, Pedro Rico **(Gessner Engineering)**, Pat Riley **(Spring Valley Village)**, Luciuo Vasquez **(Project Surveillance, Inc.)**

Question from Brian Conrad (Conrad Construction Co., Ltd.) at 03:31 PM on 01/05/2021

At the beginning of construction we discussed private irrigation lines within the City ROW that is in conflict with proposed work. The City had previously requested residents to remove or relocate prior to construction, but this did not happen. Conrad crew had to remove, rebuild, and relocate many private irrigation systems on Winningham prior to starting excavations. There were no provisions in this contract, but in next Spring Valley project to bid, a pay item was added to cover this work. Pay item to "relocate, replace, or repair Private Irrigation Systems located within the ROW, for Each Parcel Disturbed" was included and priced at $500.00/EA. To date there have been approximately 11 lots completed on Winningham and still have several on Green Valley that have not been completed.

We are requesting this same item of work be added to this contract at the same unit price of $500/ea. Please advise.

Official Response: **Sean Ray (Gessner Engineering)** *responded on Friday, January 8th, 2021 at 2:41PM CST*

Irrigation item can be added in. Please provide RFP with above unit price, a complete number of lots (units), and total cost. New item will be included in Change Order #1. New Item description will read: "Relocate, Replace or Repair Private Irrigation Systems Located within the ROW, for Each Parcel Disturbed. Complete in Place."

Attachments:

All Replies:

Response from Sean Ray (Gessner Engineering) at 02:41 PM on 01/08/2021

Irrigation item can be added in. Please provide RFP with above unit price, a complete number of lots (units), and total cost. New item will be included in Change Order #1. New Item description will read: "Relocate, Replace or Repair Private Irrigation Systems Located within the ROW, for Each Parcel Disturbed. Complete in Place."

Attachments:

BY	DATE	COPIES TO

CONRAD CONSTRUCTION CO., LTD

Phone: (713) 937-3081 Fax (713) 937-1172
brianwconrad@hotmail.com

RFP 3
(Per RFI 3 / Spec. 02714)

Flexible Base Course for Temporary Driveways

(Estimated Quantity)

23 EA x $500.00 = $11,500.00

* Specifications and pay item sheets for the last 3 Spring Valley projects completed and 1 upcoming Spring Valley projects attached. All reference spec. 02714 and paid by EA.

Brian Conrad
Vice President
Conrad Construction Co., LTD

RFI #3

Gessner Engineering - College Station
2501 Ashford Drive
College Station, Texas 77840
Phone: (979) 680-8840

Project: 19-1148 - Green Valley & Winningham (W of Voss)
8800 Winningham Lane
Spring Valley Village, Texas 77055

Temporary driveways

TO:	Sean Ray **(Gessner Engineering)**	**FROM:**	Brian Conrad **(Conrad Construction Co., Ltd.)** 13408 Emmett Road Houston, Texas 77041
DATE INITIATED:	01/06/2021		
LOCATION:		**STATUS:**	Closed on 01/14/21
PROJECT STAGE:	Construction	**DUE DATE:**	01/12/2021
COST IMPACT:	$500.00	**COST CODE:**	
DRAWING NUMBER:		**SCHEDULE IMPACT:**	TBD
LINKED DRAWINGS:		**SPEC SECTION:**	
		REFERENCE:	
RECEIVED FROM:	Brian Conrad **(Conrad Construction Co., Ltd.)**		

COPIES TO:
Ric Bolin **(Conrad Construction Co., Ltd.)**, Brian Conrad **(Conrad Construction Co., Ltd.)**, Steven Conrad **(Conrad Construction Co., Ltd.)**, Sean Ray **(Gessner Engineering)**, Pedro Rico **(Gessner Engineering)**, Pat Riley **(Spring Valley Village)**, Luciuo Vasquez **(Project Surveillance, Inc.)**

Question from Brian Conrad (Conrad Construction Co., Ltd.) at 03:41 PM on 01/05/2021

When removing half the roadway it will be necessary to install crushed concrete temporary driveways for resident's to access their property.
This item of work is a separate pay item and has been included on all past projects and the upcoming Lone Star Dr. project for Spring Valley. Since there is no salvageable base under existing pavement, so crushed concrete will need to be purchased.
We are requesting a pay item be added for "Flexible Base Course for Temporary Driveways" per EA at a price of $500/EA. This includes furnish and install, maintenance, and removal of each. Please advise.

Official Response: **Sean Ray (Gessner Engineering)** *responded on Thursday, January 14th, 2021 at 2:52PM CST*

After discussion with project team, it is understood that the Flexible Base Course for Temporary Driveways is a typical item used in the region and the contractor anticipated utilizing the crushed limestone that was expected under the existing concrete. This item will be added to Change Order #1

Attachments:

BY	DATE	COPIES TO

CONRAD CONSTRUCTION CO., LTD

Phone: (713) 937-3081 Fax (713) 937-1172
brianwconrad@hotmail.com

RFP 4
2" PVC Streetlight Conduit and pull boxes

2" PVC streetlight conduit
1040 LF x $19.55/LF = $20,332.00

2' x 2' x 2' Pullbox
4 EA x $862.50/EA = $3,450.00

Total = $23,782.00

Brian Conrad
Vice President
Conrad Construction Co., LTD

TCH
DIRECTIONAL DRILLING

P.O. BOX 1250
FRIENDSWOOD, TX 77549
OFFICE: 281.993.2999
FAX: 281.993.1888

TCH is a City of Houston SBE Certified Contractor

QUOTE

Name	Conrad Construction	Date	January 12, 2021
Address		Estimate No.	11485
City	State TX ZIP	Rep	AMH
Phone	Brian Conrad	FOB	CD-1

Qty	Description	Unit Price	TOTAL
	Spring Valley		
	Green Valley Drive		
	Labor & Equipment		
1040	LNFT Bore and install (1) 2in PVC conduit	$17.00	$17,680.00
4	Provide and set 2'x2'x2' pull box	$750.00	$3,000.00
	Materials		
	materials included in price above		
	Conditions: Must purchase all quoted items and quantities quoted to validate pricing.		
	Customer will be subject to a "down-time" charge due to delays beyond TCH's control.		
	Payment Terms: Net 30		
	TCH not responsible for damage to unknown utilities.		
	TCH assumes there is a clear path underground for product installation.		
		SubTotal	$20,680.00
		Tax, if applicable	$ -
		TOTAL	$20,680.00

Quote prepared by Austin Hughes
Bid prices valid for 30 days.
Thank you.

+ 15% OH&P

Customer Authorization & Approval_____Date_____

PO# _____

PICS THE CONTRACTORS' CHOICE
ISN Collect. Verify. Connect.
DISA GLOBAL SOLUTIONS
VERIFORCE

Spring Valley Village City Council
Agenda Item Data Sheet

MEETING DATE: February 23, 2021

TOPIC: **Approval of Pay Estimate No. 5 for the New Production Well Project to W. W. Payton Corporation in the Amount of $129,060.00**

BACKGROUND: This is Pay Estimate No. 5 submitted by W.W. Payton Corporation for the New Production Well Project for work completed on the Project from October 3, 2020 through December 31, 2020.

RECOMMENDATION: Peter Lyman with WSP, Project Engineers and City Staff have reviewed Pay Estimate No. 5 and recommend approval.

ATTACHMENTS:
- Pay Estimate No. 5 Submitted by W. W. Payton Corporation

FUNDING ISSUES:

☐ Not applicable – no dollars are being spent or received.
☒ Full amount already budgeted in Acct/Project# 20-60-7401
☐ Not budgeted, if approved, the following will be included in the next Budget Amendment:
- ☐ $_____ from Acct/Project# _____ will be transferred to Acct/Project# _____
- ☐ _____ from unassigned fund balance will be used and added to Acct/Project# _____
- ☐ $_____ will be added to Revenue Acct# __-____ and $_____ added to Expenditure Acct/Project# _____

FINANCE VERIFICATION OF FUNDING:

SUBMITTING STAFF MEMBER:	**CITY ADMINISTRATOR APPROVAL:**
Pat Riley, Director of Public Works	

DIVIDER PAGE

MEMO

TO: Julie Robinson, ICMA-CM, Pat Riley and Michelle Yi,
City of Spring Valley Village

FROM: Peter Lyman, P.E., WSP USA

SUBJECT: Review of W.W. Payton Corporation, Estimate No. 5 for Payment -
City of Spring Valley Village New Production Well, Project No. 2019-01-01B,
TWBD SWIFT Project No. 51056

DATE: January 13, 2021

Attached to this document is Estimate No. 5 (Date January 4, 2021) with the Affidavit of Bills Paid and Partial Waiver of Lien that W. W. Payton Corporation provided for the City of Spring Valley Village project referenced above. Estimate No. 5 includes the completed work from October 3, 2020 through December 31, 2020. WSP has checked the documents attached, including the unit prices, quantities charged and amounts listed, and recommends the estimate for payment. The notice to proceed date was 5/23/19 and the adjusted completion date is 3/31/21.

Please see below for additional project information:

ORIGINAL CONTRACT AMOUNT	$3,150,000.00
Total Value of Work Completed to 12/31/20	$2,119,900.00
Retainage of 10%	$211,990.00
Total Amount of Prior Payments	$1,778,850.00
Amount Due this Estimate No. 5	$129,060.00
Total Remaining Balance	$1,104,100.00

WSP USA
Suite 200
16200 Park Row
Houston, TX 77084

Tel.: +1 281 589-5900
Fax: +1 281 759-5164
wsp.com

Please contact us, if you have any related questions.

Peter Lyman, P.E.
Environmental Engineer

MONTHLY ESTIMATE APPLICATION

DATE: 1/4/2021

CLIENT: CITY OF SPRING VALLEY VILLAGE

ADDRESS: 1025 Campbell Rd
Houston, TX 77055

PROJECT: NEW PRODUCTION WELL
PROJECT NO.: 2019-01-01B
TWDB SWIFT PROJECT NO.: 51056
CONTRACTOR: W.W. Payton Corporation

ADDRESS: P.O. BOX 1056
Katy, Texas 77492

ESTIMATE NO: 5

FROM: 10/3/2020 TO 12/31/2020

CONTRACT TIME: 400 C.D.
EXTENSIONS: 279 C.D.
NTP DATE: 5/23/2019

ORIGINAL COMPLETION DATE: 6/26/2020
PROJECT EST. COMPLETION DATE: 3/31/2021

ANALYSIS OF CONTRACT AMOUNT

Original Contract Amount	$3,150,000.00
Change Order:	$74,000.00
Adjusted Contract Amount:	$3,224,000.00
Total Value of Work Completed to Date:	$2,119,900.00
Less 10% Retainage:	$211,990.00
Total Completed, Less Retainage	$1,907,910.00
Less Previous Applications for Payment:	$1,778,850.00
******AMOUNT DUE THIS ESTIMATE******	**$129,060.00**

RECOMMEND APPROVAL
Payment Due Contractor:
CITY OF SPRING VALLEY VILLAGE

By: _____

Date: _____

AGREED:
W.W. Payton Corporation

By: Kimberly Campbell

Date: 1-12-2021

APPROVED:

By: _____

Date: _____

W. W. PAYTON CORPORATION
General Contractor Serving Texas
P.O. Box 1056 Katy, Texas 77492-1056

December 31, 2020

City of Spring Valley Village
1025 Campbell Rd
Houston, TX 77055

Attn: WSP USA - Mr. Peter Lyman, P.E.

Estimate No. 5
City of Spring Valley Village
New Production Well
Project No. 2019-01-01B
Payton Job No. 684
TWDB SWIFT Project No. 51056

We estimate the total amount of work done for the period ending 12/31/20 for the above references project to be:

	DESCRIPTION	QTY. BID	QTY. PRIOR	QTY. THIS PERIOD	DONE TOTAL	UNIT	UNIT PRICE	AMOUNT COMPLETE
	UNIT B: BASE BID ITEMS							
1	Mobilization and demobilization for Water Well No. 2	1	0.5	0	0.5	LS	$60,000.00	$30,000.00
2	Drill, construct, test and equip Water Well No. 2						1,678,000.00	
a	Pilot hole drilled, logged and sampled	1	1	0	1	LS	375,000.00	375,000.00
b	Reaming of pilot hole and conductor casing set and cemented in place	1	1	0	1	LS	375,000.00	375,000.00
c	Underreaming the pilot hole below the conductor casing	1	1	0	1	LS	190,000.00	190,000.00
d	Production casing and screen(s) set in place	1	1	0	1	LS	350,000.00	350,000.00
e	Graveling, sterilizing, developing and testing the well.	1	1	0	1	LS	268,000.00	268,000.00
f	Furnishing the test pumping equipment & Pump Test	1	1	0	1	LS	100,000.00	100,000.00
g	Well yard clearing, grading sidewalks, surfacing, topsoil seeding and sodding	1				LS	20,000.00	
3	Well Pump Equipment						235,000.00	
a	Concrete pump foundation	1	1	0	1	LS	6,000.00	6,000.00
b	Permanent Pumping Equipment & Discharge Head	1	1	0	1	LS	185,000.00	185,000.00
c	Electric Motor	1				LS	44,000.00	
4	Discharge Piping manifold from Well 1 to meter run, concrete sidewalk and pipe supports, complete	1				LS	40,000.00	
5	Turn discharge head of existing pump at well 1, demolish existing pump foundation and construct new concrete pump foundation	1				LS	30,000.00	
6	Discharge Piping manifold from Well 2 to meter run, concrete sidewalk and pipe supports, complete	1				LS	40,000.00	
7	Meter run piping and fitting and collection line to tie-in with existing piping to the ground storage tanks	1				LS	50,000.00	
8	All electrical work , programming work, electrical foundation pads and canopy for Well No. 2	1				LS	325,000.00	

	DESCRIPTION	QTY. BID	QTY. PRIOR	QTY. THIS PERIOD	DONE TOTAL	UNIT	UNIT PRICE	AMOUNT COMPLETE
	UNIT B: BASE BID ITEMS Cont.							
9	All chlorination, ammonia, fluoride and polyphosphate system work for single injection point at the water plant	1				LS	295,000.00	
10	Building foundation, two 8'X8' FRP buildings and one 10' X 10' FRP building for chemical systems	1	0	1	1	LS	105,000.00	105,000.00
11	Concrete splash box and drain for well No. 1	1				LS	4,210.00	
12	Concrete splash box and drain for well No. 2	1				LS	8,000.00	
13	Asphalt apron and subgrade around Well No. 2	7850				SF	9.00	
14	8-foot chain link fence	500				LF	25.00	
15	16-foot wide chain link double swing gate	2				EA	1,700.00	
16	3-foot wide chain link single pedestrian swing gate	1				EA	1,000.00	
17	Filter fabric fence	240				LF	1.00	
18	Sound barrier	250	120	0	120	LF	80.00	9,600.00
							Total Unit B	**$1,993,600.00**
	DESCRIPTION	**QTY. BID**	**QTY. PRIOR**	**QTY. THIS PERIOD**	**DONE TOTAL**	**UNIT**	**UNIT PRICE**	**AMOUNT COMPLETE**
	UNIT C: EXTRA BID ITEMS							
19	Spectralog, if required by the City, in the pilot hole after making and reviewing Gramma Ray Log, all complete	1	1	0	1	EA	$1,600.00	$1,600.00
20	Furnish and install 30-sack cement plug, if required, in the pilot hole below the selected completion depth of the well, complete	1	1	0	1	EA	6,000.00	6,000.00
21	Extra sacks of cement more than the base amount of 30 sacks in a cement plug below the selected completion depth of the well included in Item 20 above	10				SK	25.00	
22	Complete water - sampling operation in the pilot hole from which the City requires water samples to be taken with a base development and pumping time of 36 hours, water samples and analyses, and associated static and pumping water-level measurements and pumping rate, all complete	3	2	0	2	EA	32,200.00	64,400.00
23	Pilot hole, as required, other than the 1,300-foot base depth for well in item 2	50				LF	60.00	
24	Abandonment, if required, of pilot hole included in item 2	1				EA	105,000.00	
25	20-inch diameter surface casing , as required, cemented in place other than the 730-foot base depth for the well in item 2	10	-5	0	-5	LF	180.00	-900.00
26	14-inch diameter blank production casing, as required, in place other than the 320-foot base length for the well in item 2	10	-87	0	-87	LF	100.00	-8,700.00

	DESCRIPTION	QTY. BID	QTY. PRIOR	QTY. THIS PERIOD	DONE TOTAL	UNIT	UNIT PRICE	AMOUNT COMPLETE
	UNIT C: EXTRA BID ITEMS Cont.							
27	14-inch diameter stainless steel screen wrapped on mild steel pipe, as required in place other than the 230-foot base length for the well in item 2	15	102	0	102	LF	250.00	25,500.00
28	20-foot length of pump column assembly, air-line, and one 1 1/4-inch schedule 40 PVC tube in place complete, if required, other than the 520-foot base length for the pump in item 3	4				EA	2,500.00	
29	Intermediate stage of bowl assembly (cast iron) added to the pump, as quoted in item 3, if required, and as shown in the pump data submittals for present conditions	2				EA	2,000.00	
30	Intermediate stage of bowl assembly (ductile iron) added to the pump, as quoted in item 3, if required, and as shown in the pump data submittals for present conditions	2				EA	2,250.00	
31	One-hour of pumping or water level recovery time, if required, other than 36 hours for a complete water sampling operation given in item 22	20				HR	$75.00	
32	One-hour of pumping test time, if required, other than 96 hours given for the well in Item 2.	10				HR	300.00	
							Total Unit C:	**$87,900.00**
	UNIT D: CASH ALLOWANCE							
1	CenterPoint Energy Allowance for Electrical Service for Well 2	1					$35,000.00	
							Total Unit D:	**$0.00**
	UNIT E: CHANGE ORDER							
1	Concrete Masonry Unit (CMU) Building	1	0	0.6	0.6	LS	64,000.00	38,400.00
1a	Contingency-Concrete Masonry Unit (CMU) Building	1				LS	10,000.00	
2	Increased the Contract Time by 279 days							
							Total Unit E:	**$38,400.00**

City of Spring Valley Village New Production Well
City Project No. 2019-01-01B
Payton Job # 684 TWDB SWIFT Project No. 51056

NOTE: This breakdown is approximate and intended only for the purpose of preparing monthly pay estimates

	Original Contract Amount	Current Contract Amount
Unit B: Base Bid Items (1-18)	$2,978,000.00	$2,978,000.00
Unit C: Extra Bid Items (19-32)	$137,000.00	$137,000.00
Unit D: Cash allowance (1)	$35,000.00	$35,000.00
Unit E: Change Order (1-2)		$74,000.00
Total Amount:	**$3,150,000.00**	**$3,224,000.00**

	WORK DONE TO DATE			
	Unit B: Base Bid Items (1-18)		:	$1,993,600.00
	Unit C: Extra Bid Items (19-32)		:	$87,900.00
	Unit D: Cash allowance (1)		:	$0.00
	Unit E: Change Order (1)			$38,400.00
	Total Amount Done to Date		:	$2,119,900.00
	Less Retainage	10%	:	$211,990.00
	Difference		:	$1,907,910.00
	Less Previous Estimate		:	$1,778,850.00
	TOTAL AMOUNT DUE THIS ESTIMATE		:	**$129,060.00**

Sincerely,

Kimberly Campbell

APPROVED FOR PAYMENT
City of Spring Valley Village

BY:

DATE:

PLEASE RETURN ONE (1) APPROVED COPY FOR OUR FILES

W. W. PAYTON CORPORATION
GENERAL CONTRACTOR SERVING TEXAS
P.O. BOX 1056 – KATY, TEXAS 77492-1056
(281) 371-7068

CITY OF SPRING VALLEY VILLAGE
PRODUCTION WATER WELL, ELECTRICAL & CHLORINATION
PAYTON JOB NO. 684

SCHEDULE OF COMPLETION

Work Items	Start	Completion
NOTICE TO PROCEED		
Submittal Preparation/ Obtain Permits/ Staking etc…	**complete**	
Construct sound wall for drilling operations	**complete**	
Drill test hole and construct water well	**complete**	
Construction of chemical/control building foundation	**complete**	
Remove forms from building foundation	12-03-2020	12-03-2020
CMU building construction including roof	12-08-2020	02-05-2021
Set roof deck	01-15-2021	01-15-2021
Water Well 2 discharge and meter run piping	01-11-2021	02-21-2021
Installation of storm sewer	01-11-2021	02-22-2021
Turn discharge head at WW 1 demo existing foundation and construct new pump foundation	01-18-2021	02-12-2021
COMPLETION DATE	**March 23, 2021**	

Notes
1. This is a tentative schedule based upon normal jobsite & weather conditions and information available at this time;
2. Electrical work will be incorporated into project as required to meet the completion time.

AFFIDAVIT OF BILLS PAID

THE STATE OF TEXAS
COUNTY OF WALLER

Wesley W. Payton, being first duly sworn that he is President of W. W. Payton Corporation, of Waller County, Texas hereinafter called "Company" and
That said company has performed work and/or furnished material for City of Spring Valley Village hereafter called "Owner", pursuant to a contract, dated March 26th, 2019 (hereinafter called "Contract") for the construction of:

City of Spring Valley Village
City of Spring Valley Village New Production Well Project
BID Job No. 2019-01-01B

That all just and lawful invoices against the company for labor, materials and expendable equipment employed in the performance of the Contract have been paid in full prior to acceptance of payments for the Owner, and

That no mechanic's or materialman's liens have been filed upon the property of the Owner or materials incorporated into the Facilities, and

That the Company agrees to indemnify and hold the Owner and Engineers harmless from all liability arising from claims by subcontractors, materialmen and suppliers under Contract, and

That no claims have been made or filed upon the payment bond, and

That the Company has not received any claims or notice of claims from the subcontractor, materialmen and suppliers.

By: _____
Title: President
Printed Name: Wesley W. Payton

ATTEST:

_____
Printed Name: Marilyn R. Payton - Secretary

THE STATE OF TEXAS
COUNTY OF WALLER

Before me, the undersigned authority, on this day personally appeared Wesley W. Payton the President of W. W. Payton Corporation a Texas corporation, known to me to be the person and office whose name is subscribe to the foregoing instrument, and acknowledged to me that he executed the same as the act and deed of such corporation, for the purposes and consideration therein expressed, and in the capacity therein stated.

GIVEN UNDER MY HAND AND SEAL OF OFFICE, on this the 4TH day of January, 2021.

_____
Notary Public in and for
State of Texas
Kimberly Campbell
(Printed Name of Notary)

Commission Expires: 9-12-2022

KIMBERLY CAMPBELL
My Notary ID # 131720413
Expires September 12, 2022

PARTIAL WAIVER OF LIEN

THE STATE OF TEXAS
COUNTY OF WALLER

The undersigned contracted with **City of Spring Valley Village to** furnish New Production Well in connection with certain improvements to real property located in Harris County, Texas, and owned by City of Spring Valley Village which Improvements are described as follows:
City of Spring Valley Village New Production Well Project
BID Job No. 2019-01-01B

In consideration of Pay Estimate No. 5 in the amount of One Hundred Twenty Nine Thousand Sixty and No/100 DOLLARS ($129,060.00) and other good and valuable consideration, the receipt and sufficiency of which is hereby acknowledged and confessed, the undersigned does hereby waive and release any mechanics' lien or materialmen's lien or claims of lien that the undersigned has or hereafter has on the above-mentioned real property on account of any labor performed or materials furnished or to be furnished or labor performed and materials furnished by the undersigned pursuant to the above-mentioned contract or any constitutional lien that the undersigned may have.

Undersigned hereby guarantees that all bills for labor performed and/or materials furnished in the erection and construction of such Improvements on the Property have been fully paid and satisfied and Undersigned does further guarantee that if for any reason a lien or liens are filed for material or labor against said Property arising out of any bills for material or labor in connection with the erection or construction of said Improvements thereon, Undersigned will obtain a settlement of such lien or liens and a proper release thereof shall be obtained.

W. W. Payton Corporation

By: _____
Wesley W. Payton - President

SWORN TO AND SUBSCRIBED BEFORE ME, on this the 4th day of January, 2021, to certify which witness my hand and seal of office.

Kimberly Campbell
NOTARY PUBLIC in and for the State of Texas

My Commission Expires:
9-12-2022

KIMBERLY CAMPBELL
My Notary ID # 131720413
Expires September 12, 2022

W.W. PAYTON CORPORATION

GENERAL CONTRACTOR SERVING TEXAS

P.O. BOX 1056 KATY, TEXAS 77492-1056

(281) 371-7068 / FAX (281) 371-7069

CITY OF SPRING VALLEY VILLAGE

NEW PRODUCTION WELL

PROJECT NO. 2019-01-01B

PAY APPLICATION No.: 5

REPORTING PERIOD: 10/2/2020 TO 12/31/2020

SUBCONTRACTOR AND WORK PERFORMED DURING THIS PERIOD:

Subcontractor - N/A

Construct Building Foundation

MEETING DATE: February 23, 2021

TOPIC: **Resolution Number 21-XX**

A RESOLUTION OF THE CITY COUNCIL OF THE CITY OF SPRING VALLEY VILLAGE, TEXAS, RATIFYING THE ACTIONS OF THE CITY ADMINISTRATOR IN EXECUTING AN AMENDMENT TO THE CONTRACT BY AND BETWEEN THE CITY OF SPRING VALLEY VILLAGE, TEXAS AND CONRAD CONSTRUCTION CO. LTD. FOR PAVING AND UTILITY IMPROVEMENTS TO SERVE LONE STAR DR., LOESER DR., TRAWEEK DR., WEST TEX DR. AND LARIAT DR. (CSB #2020-11-101); PROVIDING FOR INCORPORATION OF PREAMBLE; AND PROVIDING AN EFFECTIVE DATE.

BACKGROUND: On December 15, 2020, by Resolution Number 20-34, the City Council approved a Contract by and between the City of Spring Valley Village, Texas and Conrad Construction Co. Ltd. for Paving And Utility Improvements To Serve Lone Star Dr., Loeser Dr., Traweek Dr., West Tex Dr. And Lariat Dr. (CSB #2020-11-101) ("Contract"). Following the approval of the Contract, Conrad Construction notified Director of Public Works Pat Riley that the approved Contract included an incorrect number of days for completion of the Scope of Work (220 calendar days instead of 315 calendar days). The correct number of days for completion of the Scope of Work was reflected in the attachments to the Contract; however, it was inadvertently missed in the main Contract.

In order to facilitate the issuance of the Notice to Proceed and ordering and fabrication of materials required for this Project as quickly as possible, City Administrator Julie Robinson executed an Amendment to the Contract on February 4, 2021 that corrects the number of calendar days for completion of the Scope of Work from 220 calendar days to 315 calendar days.

This Resolution would ratify Ms. Robinson's execution of the Amendment to the Contract with Conrad Construction.

RECOMMENDATION: Staff recommends approval of the Resolution.

ATTACHMENTS:
- Resolution Number 21-XX

FUNDING ISSUES:
☒ Not applicable – no dollars are being spent or received.
☐ Full amount already budgeted in Acct/Project# _____
☐ Not budgeted, if approved, the following will be included in the next Budget Amendment:
  ☐ $_____ from Acct/Project# _____ will be transferred to Acct/Project# _____
  ☐ $_____ from unassigned fund balance will be used and added to Acct/Project# _____

☐ $_____ will be added to Revenue Acct# __-____ and $_____ added to Expenditure Acct/Project# _____	
FINANCE VERIFICATION OF FUNDING:	
SUBMITTING STAFF MEMBER: Julie M. Robinson, City Administrator	**CITY ADMINISTRATOR APPROVAL:**

RESOLUTION NUMBER 21-XX

A RESOLUTION OF THE CITY COUNCIL OF THE CITY OF SPRING VALLEY VILLAGE, TEXAS, RATIFYING THE ACTIONS OF THE CITY ADMINISTRATOR IN EXECUTING AN AMENDMENT TO THE CONTRACT BY AND BETWEEN THE CITY OF SPRING VALLEY VILLAGE, TEXAS AND CONRAD CONSTRUCTION CO. LTD. FOR PAVING AND UTILITY IMPROVEMENTS TO SERVE LONE STAR DR., LOESER DR., TRAWEEK DR., WEST TEX DR. AND LARIAT DR. (CSB #2020-11-101); PROVIDING FOR INCORPORATION OF PREAMBLE; AND PROVIDING AN EFFECTIVE DATE.

WHEREAS, on February 4, 2021, the City Administrator executed an Amendment to the Contract By And Between The City Of Spring Valley Village, Texas And Conrad Construction Co. Ltd. For Paving And Utility Improvements To Serve Lone Star Dr., Loeser Dr., Traweek Dr., West Tex Dr. And Lariat Dr. (CSB #2020-11-101) ("Amendment"), a copy of which is attached hereto as Exhibit "A" and incorporated herein by reference, on behalf of the City of Spring Valley Village; and

WHEREAS, upon review and consideration of all matters attendant and related thereto, the City Council hereby finds and determines that: (1) it is in the best interests of the City of Spring Valley Village and its citizens to approve the Amendment; and (2) that the actions of the City Administrator in executing the Amendment should be ratified in all respects.

NOW, THEREFORE

BE IT RESOLVED BY THE CITY COUNCIL OF THE CITY OF SPRING VALLEY VILLAGE, TEXAS, THAT:

Section 1. The above and foregoing premises are true and correct and are incorporated herein and made a part hereof for all purposes.

Section 2. The actions of the City Administrator taken for and on behalf of the City in executing the Amendment on behalf of the City of Spring Valley Village are ratified in all respects.

Section 3. This Resolution shall become effective immediately upon its passage.

DULY PASSED AND APPROVED on this the _____ day of _____, 2021.

_____
Marcus Vajdos, Mayor
City of Spring Valley Village, Texas

ATTEST:

_____
Roxanne Benitez, City Secretary
City of Spring Valley Village, Texas

EXHIBIT “A”

TO

RESOLUTION NUMBER 20-XX

AMENDMENT TO THE CONTRACT FOR CONSTRUCTION BETWEEN THE CITY OF SPRING VALLEY VILLAGE, TEXAS AND CONRAD CONSTRUCTION CO., LTD FOR PAVING AND UTILITY IMPROVEMENTS TO SERVE LONE STAR DR., LOESER DR., TRAWEEK DR., WEST TEX DR., AND LARIAT DR.

STATE OF TEXAS §
§
COUNTY OF HARRIS §

This is an amendment ("Amendment") to the Contract for Construction between the City of Spring Valley Village, Texas ("City") and Conrad Construction Co., LTD ("Conrad") for Paving and Utility Improvements to serve Lone Star Dr., Loeser Dr., Traweek Dr., West Tex Dr. and Lariat Dr. effective this the 4th day of February, 2021.

WHEREAS, the City and Conrad entered into a contract for construction for paving and utility improvements to serve Lone Star Dr., Loeser Dr., Traweek Dr., West Tex Dr., and Lariat Dr. dated December 15, 2020 ("Contract"); and

WHEREAS, the City and Conrad desire to amend the Contract as set forth herein.

Now, therefore, in exchange for the mutual promises contained herein and other consideration the receipt and sufficiency are hereby acknowledged, the City and Conrad hereby agree as follows:

1. Paragraph 2.01, Schedule for Completion, of Article 2, is hereby amended to change the last sentence of Paragraph 2.01 to read as follows:

> "Contractor shall fully complete the entire Scope of Work to the satisfaction of the City within 315 calendar days after the date of the written notice to proceed has been issued by the City."

2. All other terms and conditions of the Contract shall remain in full force and effect.

Agreed and entered into this the 4th day of February, 2021.

CITY OF SPRING VALLEY VILLAGE, TEXAS

Julie M. Robinson, City Administrator

ATTEST:

Roxanne Benitez

Roxanne Benitez, City Secretary

CONRAD CONSTRUCTION CO. LTD.

By: _____

Printed Name: Brian Conrad

Title: Vice President

MEETING DATE:	February 23, 2021
TOPIC:	**RESOLUTION NUMBER 21-XX** **A RESOLUTION OF THE CITY COUNCIL OF THE CITY OF SPRING VALLEY VILLAGE, TEXAS, ADOPTING AN INFRASTRUCTURE DESIGN MANUAL; PROVIDING FOR THE INCORPORATION OF PREAMBLE; AND PROVIDING AN EFFECTIVE DATE.**
BACKGROUND:	During the November 17, 2020 Workshop Meeting, City Staff presented and the City Council discussed a draft Infrastructure Design Manual that would establish the City's specific design standards to be used by engineers when developing construction design and standard details for the City's public infrastructure projects. The Council also provided direction with regard to the following policy issues, all of which have been included in the proposed Public Infrastructure Design Manual presented for the Council's consideration: • **Residential Street Width** – All residential streets will have a width of twenty-eight (28') feet. Exceptions to the twenty-eight (28') feet can occur in limited situations (i.e. large trees in ROW). • **Pavement Type** – All streets will be constructed in concrete. • **Street Curb Type** – Six-inch (6") monument curbs will be used on all collector streets and four-inch (4") rollover curbs for local/residential streets. In conjunction with the street curb types, the use of a galvanized fabricated connection will required instead of the current cast iron curb connection. • **Sidewalks** – The construction of sidewalks will be limited to collector and thoroughfare streets. This Resolution would formally adopt the proposed Public Infrastructure Design Manual which will help to ensure consistency in the design standards used for the City's infrastructure projects and provide the City's different engineering firms with clear guidance on the design standards to be used.
RECOMMENDATION:	Staff recommends approval of the Resolution.
ATTACHMENTS:	• Resolution No. 21-XX

FUNDING ISSUES:	☒ Not applicable – no dollars are being spent or received. ☐ Full amount already budgeted in Acct/Project# _____ ☐ Not budgeted, if approved, the following will be included in the next Budget Amendment: ☐ $_____ from Acct/Project# _____ will be transferred to Acct/Project# _____ ☐ $_____ from unassigned fund balance will be used and added to Acct/Project# _____ ☐ $_____ will be added to Revenue Acct# __-____ and $_____ added to Expenditure Acct/Project# _____
FINANCE VERIFICATION OF FUNDING:	

SUBMITTING STAFF MEMBER: Pat Riley, Director of Public Works	**CITY ADMINISTRATOR APPROVAL:**

RESOLUTION NUMBER 21-XX

A RESOLUTION OF THE CITY COUNCIL OF THE CITY OF SPRING VALLEY VILLAGE, TEXAS, ADOPTING A PUBLIC INFRASTRUCTURE DESIGN MANUAL; PROVIDING FOR THE INCORPORATION OF PREAMBLE; AND PROVIDING AN EFFECTIVE DATE.

WHEREAS, the City of Spring Valley Village desires to have a written policy outlining the policy and processes for public infrastructure design, and the City does not currently have such a policy; and

WHEREAS, the City Council is of the opinion that the Public Infrastructure Design Manual attached hereto as Exhibit "A" should be adopted.

NOW, THEREFORE, BE IT RESOLVED BY THE CITY COUNCIL OF THE CITY OF SPRING VALLEY VILLAGE, TEXAS, THAT:

Section 1. The above and foregoing premises are true and correct and are incorporated herein and made a part hereof for all purposes.

Section 2. The City Council of the City of Spring Valley Village hereby adopts the Public Infrastructure Design Manual attached hereto as Exhibit "A."

Section 3. This Resolution shall become effective immediately upon its passage.

DULY PASSED AND APPROVED AND ADOPTED on this the 23rd day of February, 2021.

_____
Marcus Vajdos, Mayor
City of Spring Valley Village, Texas

ATTEST:

_____
Roxanne Benitez, City Secretary
City of Spring Valley Village, Texas

EXHIBIT “A”

TO

RESOLUTION NUMBER 20-XX

EST. 1955

SPRING VALLEY

VILLAGE

PUBLIC INFRASTRUCTURE DESIGN MANUAL

for

SPRING VALLEY VILLAGE TEXAS

CHANGE EFFECTIVE DATE

COUNCIL APPROVAL DATE: FEBRUARY 23, 2021 EFFECT DATE(S) FOR CHANGES TO THE PUBLIC INFRASTRUCTURE DESIGN MANUAL AND ALL AMENDMENTS:

DETAIL	DESCRIPTION	REC. BY:	EFFECTIVE DATE	DETAIL	DESCRIPTION	REC. BY:	EFFECTIVE DATE

EST. 1955
SPRING VALLEY
VILLAGE

Texas 811
Know what's below. Call before you dig.

CHANGE TRACKING

DETAIL: CHANGES

IT'S THE LAW

www.texas811.org

The City of Spring Valley Village is a member of the One-Call System. By contacting 811, the City will be notified and will locate City-owned utilities within the limits of the marked dig area. The City will mark the facilities within 2 full business days for non-emergency tickets. Excavation operations cannot begin until all utilities have responded. For information on utility marking, please contact the Public Works Department at (713) 465-8308

White	Proposed Excavation
Pink	Temporary Survey Markings
Red	Electric Power Lines, Cables, Conduit, & Lighting Cables
Yellow	Gas, Oil, Steam, Petroleum, or Gaseous Materials
Orange	Communication, Alarm or Signal Lines, Cables, or Conduit
Blue	Potable Water
Purple	Reclaimed Water, Irrigation, and Slurry Lines
Green	Sewers & Drain Lines

References

Texas Commission on Environmental Quality (TCEQ) - "Design Criteria for Domestic Water & Wastewater Systems", Texas Administration Code - Chapter 217 and "Design Criteria for Sewerage Systems" Chapter 317 (current revision), American Water Works Association (AWWA), ANSI/NSF Standards (All newly installed pipes and related products must conform to American National Standards Institute/NSF International (ANSI/NSF) Standard 61 and must be certified by an organization accredited by ANSI.), National Sanitation Foundation (NSF), International Plumbing Code, Texas Department of Health, and Texas Department of Insurance.

Drainage Design Criteria

Spring Valley Village has a separate Drainage Criteria Manual that shall be followed in conjunction with the engineer's design. This manual can be found at **www.springvalleytx.com** in **Chapter 3** of the City code of Ordinances.

Excavations

All excavations and other construction in the public rights-of-way shall be performed in accordance with all applicable state, federal, and City regulations. All construction within public rights-of-ways shall be undertaken so as to minimize interference with the use of public and private property and in accordance with any lawful direction given by the City under regulatory powers of the City.

Water & Sewer System Test & Inspections

All water and sewer tests shall be done by the contractor at the expense of the contractor unless otherwise allowed by the City. All tests shall be done in accordance with all applicable standards and requirements from TCEQ & AWWA. Testing must be scheduled five (5) business days in advance.

Inspections

All inspections must be done according to City requirements and scheduled through the inspector assigned to the job.

Bulk Water

Temporary Water Meter for Construction – The City offers its public infrastructure contractors a way to access water through City-owned fire hydrant meters. To obtain a fire hydrant meter, complete the **temporary meter application** and submit electronically to **utilities@springvalleytx.com**.

- City Projects - A deposit of $1,400.00 is required with the application. Non-refundable credit card fees may apply. The deposit will be refunded when the meter is returned damage free and in initial condition. The City accepts all major credit cards.
  PAY DEPOSIT
- Once the application is deemed complete by the City, City Staff will place the fire hydrant meter at the best location for the project.
- The City does not charge for the water on City Projects.

NOTE: All FIRE HYDRANT FILLING OPERATIONS MUST HAVE AN AIR GAP ON THE TANK OR A TESTED RPZD BETWEEN THE FIRE HYDRANT AND THE TANK.

Wastewater Collection (Detail Sheets WW-4 through WW-11)

All sewer collection items shall be designed and installed according to adopted plumbing codes and the Texas Commission on Environmental Quality Standards.

Manholes - All manholes shall be precast concrete unless approved by a Professional Engineer who submits a "cast in place" manhole design for review and is approved by the City. All precast manholes shall incorporate a "boot" type connector for sewer diameters up to twenty-four inches (24”). For sewer diameters greater than twenty-four inches (24”), utilize either the "boot" type connector (if available) or an integral gasket. All precast manholes shall conform to the latest American Society for Testing and Materials (ASTM) requirements. Manholes shall be coated with corrosion resistant epoxy coating approved by the City. For all public sewers, manholes shall be placed at all changes in alignment, changes in grade, junction points, and either at street, alley, or easement intersections as the design may require. The maximum spacing between manholes is four-hundred feet (400’) unless otherwise approved by the City. The minimum manhole depth shall be four feet (4’). Manholes shall be placed at all dead-end mains and laterals unless otherwise approved by the City. Wall penetration shall be cored and shall use the appropriate boots and approved "grout" for sealing as approved by the City Engineer. For an existing manhole that is cored, the coating of the manhole will need to be repaired if lined.

Manhole Lids - Utilize manhole lids with the approved City of Spring Valley Village logo on all manholes. DETAIL WW-8 to WW-11.

Manholes within the 100 year floodplain - Manholes located within the 100 year floodplain or in areas of high ground water shall be waterproofed by wrapping the individual joints with Conwrap, Conseal, or approved equal. Waterproofing measures shall be approved by the City prior to backfill. Manholes showing signs of infiltration shall be excavated and repaired, to the satisfaction of the City, prior to acceptance by the City. Manholes located within the 100 year floodplain shall be installed with rim elevations not less than two feet (2’) above the floodplain at that location. Manholes located within the one hundred (100) year floodplain may also require a sealable manhole cover or an infiltration cap (DETAIL WW-5).

Streets

Street Design Requirements

Residential Street Width – All residential streets shall have a width of twenty-eight (28’) feet. Exceptions to the twenty-eight (28’) feet may occur in limited situations (i.e. large trees in ROW), and require written approval from the City prior to any paving.

Pavement Type – All streets shall be constructed in concrete.

Street Curb Type – Six-inch (6”) monument curbs shall be used on all collector streets and four-inch (4”) rollover curbs shall be used on all local/residential streets. In conjunction with these street curb types, a galvanized fabricated curb connection shall be used in compliance with the City’s Drainage Criteria Manual.

Sidewalks – The construction of sidewalks will be limited to collector and thoroughfare streets.

Compliance with Right-of-Way Regulations – Any and all work performed within the City’s rights-of-way, including cutting or excavating any public street, shall comply with all applicable local, state and federal regulations. The City has adopted right-of-way regulations that may be found on the City’s website in the Code of Ordinances. These regulations include a requirement to obtain a Right-of-Way Permit from the City for non-City projects prior to performing any work within the City’s rights-of-way. Failure to comply with applicable right-of-way regulations will result in enforcement action by the City.

Barricades Required - It shall be the responsibility of the contractor performing the work along a street to install barricades, flags, and other safety measures necessary during the time of construction and until all hazards have been corrected after the completion of the work. Whether the project is designed by an engineer or not, a traffic plan must be submitted to and approved by the City.
NOTE: The Texas Manual on Uniform Contraol Devices (TxMUTCD) shall be followed.

Backfilling Excavations Outside the Pavement - All excavations in the street right-of-way shall be replaced by tamping, and backfilling with select fill, sand, gravel, or other methods approved by the City Engineer or the City. Backfill shall be compacted according to engineering plans and specifications. The contractor shall restore any areas damaged or disturbed to original by block sodding.

Concrete Pavement Restoration - If concrete pavement has to be restored and the work cannot be avoided, all excavations or removal of any concrete pavement in the street right-of-way shall be replaced as follows:

- Replace the entire street or sidewalk panel width, length, and depth to the nearest construction or expansion joint;
- Replace the concrete pavement to existing depth or according to engineering specifications approved by the City utilizing dowels and rebar specified.

Connection of sewer service lines to existing clay City sewer mains shall use fittings specifically manufactured for the pipe materials of clay. The lateral connection shall be strapless and accommodate for ground movement with heavy duty stainless steel shear bands to prevent off set joints. The lateral connection fitting must provide a "positive stop" located inside the fitting that prohibits protrusion of the lateral pipe into the main line pipe. The fitting must provide a smooth transition all the way through to the main line pipe manufactured from synthetic rubber. The fitting will ensure a positive, water-tight and rot-free seal. The hole for the sewer service must be cored and not chipped. The fitting must meet or exceed ASTM 923, ASTM 425, ASTM 1173.

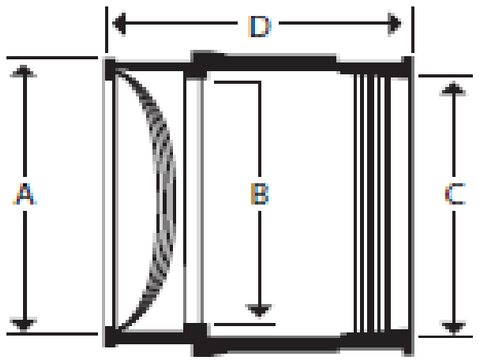

Connector Size	Connector P/N	Suggested Lateral Pipe O.D. Range	Hole/Connector Dimensions				Pipe Clamp P/N	Minimum Pipe I.D.	Minimum Wall Thickness
			A	B	C	D			
4"	4" TAP-N-TEE	5.38"	5.0625"	4.25"	5.38"	6.00"	#90	6"	.50"
6"	6" TAP-N-TEE	8.00"	7.125"	6.38"	8.00"	6.75"	#136	8"	.50"
8"	8" TAP-N-TEE	10.05"	9.125"	8.25"	10.00"	8.00"	#168	10"	.50"

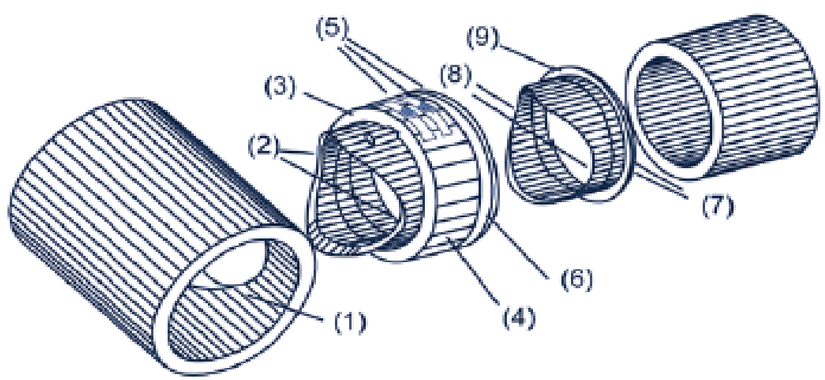

EXAMPLE OF SEWER SADDLE USED FOR CLAY PIPE

Connection of service lines to existing City PVC or Cast Iron sewer mains shall use fittings specifically manufactured for the pipe materials. The lateral connection shall be a sewer saddle with an adjustable 3 1/2 inch stainless steel strap per ASTM A 240, type 304. Bolts shall be 1/2 inch UNC rolled thread, lubricant coated, stainless steel per ASTM A 193, type 304. The nuts shall be stainless steel per ASTM A 194, type 304. Washers shall be stainless steel per ASTM A 240, type 304 and plastic lubricating washers. The gasket shall be SBR per ASTM D 2000 MBA 710, compounded for water and sewer service. The lateral connection fitting must provide a "positive stop" located inside the fitting that prohibits protrusion of the lateral pipe into the main line pipe. The fitting must ensure a positive, water-tight and rot-free seal.

EXAMPLE OF SEWER SADDLE USED FOR PVC AND CAST PIPE

EST. 1955
SPRING VALLEY
VILLAGE

Texas811
Know what's below. Call before you dig.

SEWER SERVICE TAP CONNECTION FITTINGS

DETAIL: WW-1

Cleanout/Monument Box Cover

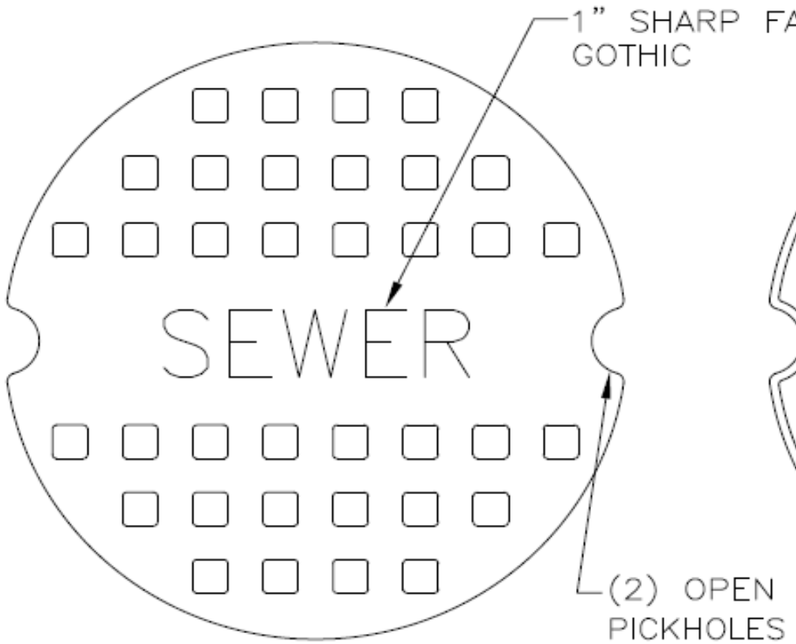

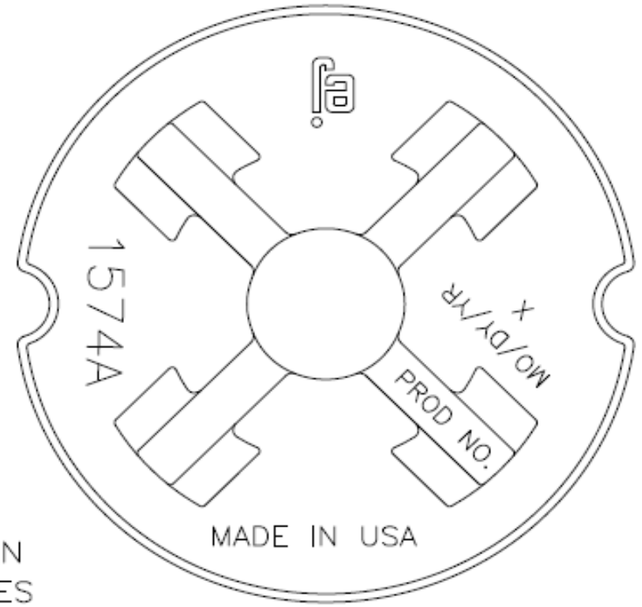

BOTTOM VIEW

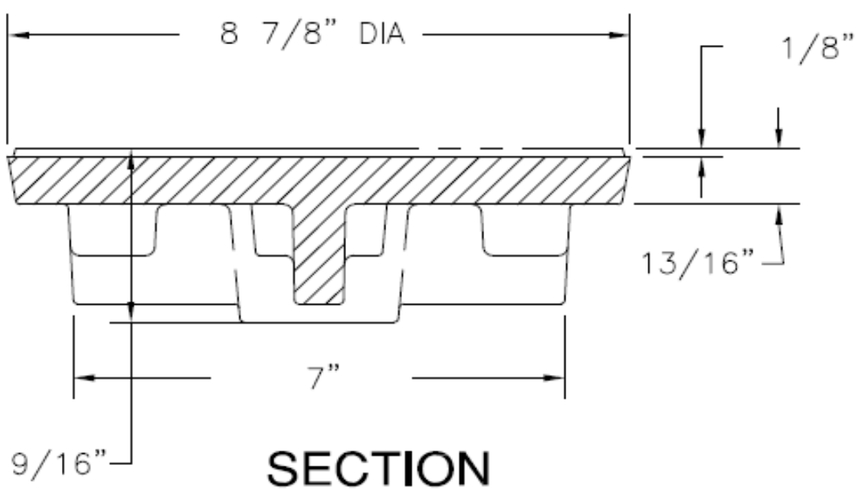

SECTION

Cleanout/Monument Box Frame

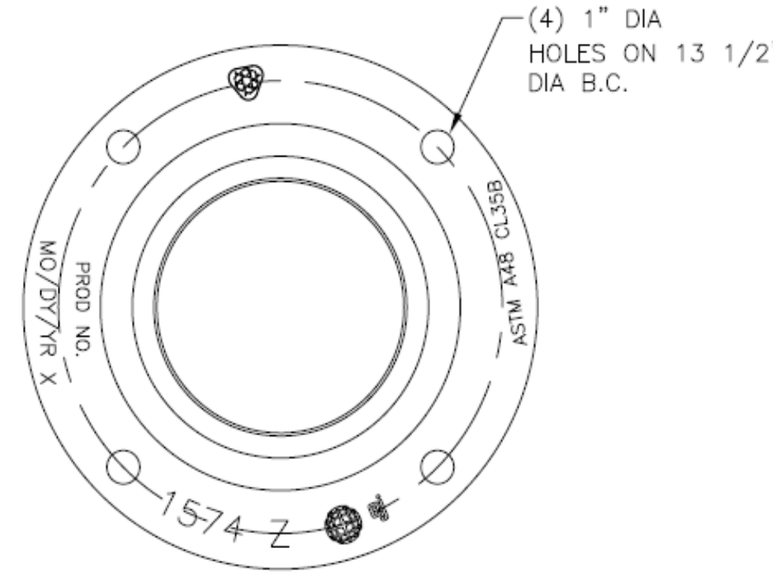

PLAN VIEW

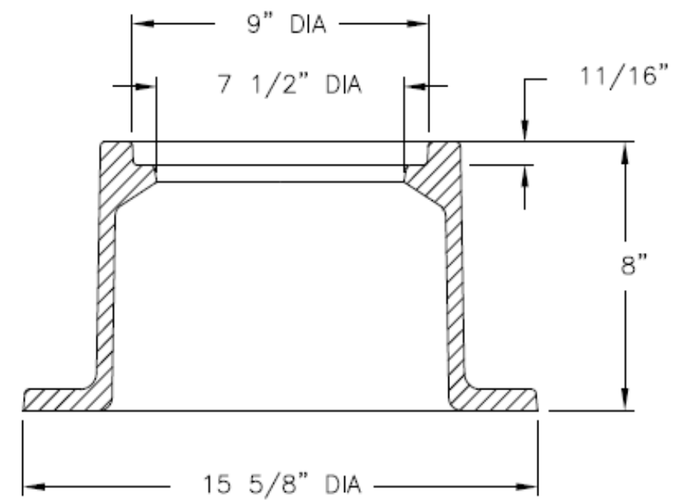

FRAME SECTION

EST. 1955 SPRING VALLEY VILLAGE

Texas 811 Know what's below. Call before you dig.

CLEAN OUT FRAME/MONUMENT BOX FRAME/COVER FOR CONCRETE

DETAIL: WW-2

NOTE: DETAIL FOR CITY PAVEMENT & UTILITY PROJECTS WHERE THE SEWER MAIN OR SEWER SERVICE LINE IS REPLACED AS PART OF THE PROJECT IN THE ROW.

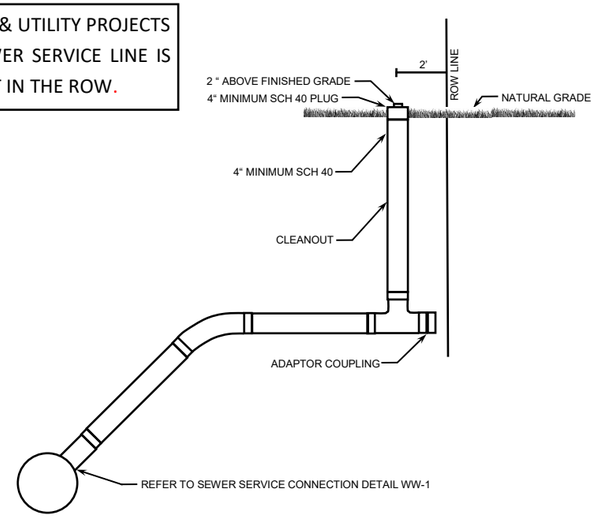

SHORT SERVICE LINE CLEAN-OUT DETAIL

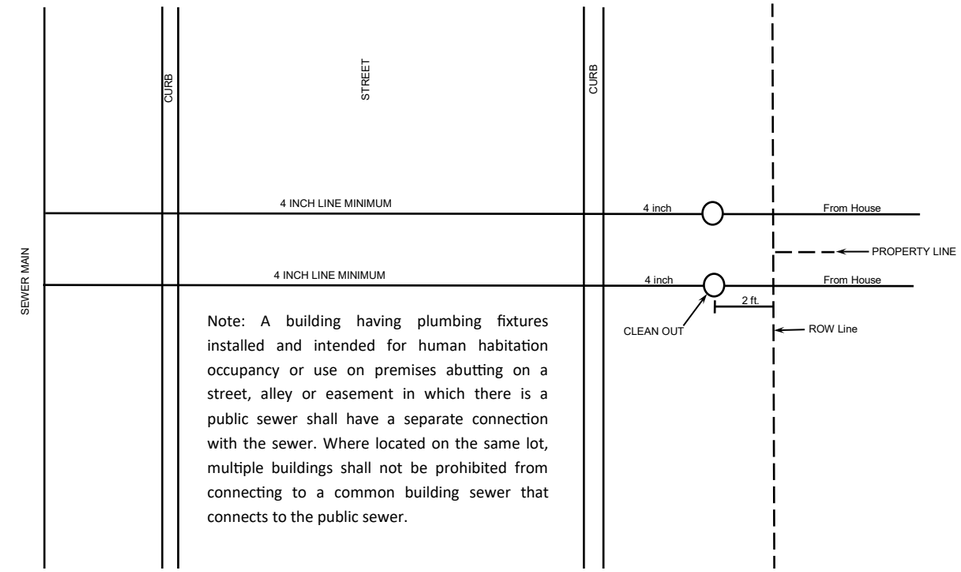

Note: A building having plumbing fixtures installed and intended for human habitation occupancy or use on premises abutting on a street, alley or easement in which there is a public sewer shall have a separate connection with the sewer. Where located on the same lot, multiple buildings shall not be prohibited from connecting to a common building sewer that connects to the public sewer.

TOP VIEW—SINGLE LONG/SHORT SERVICE LINE CLEAN-OUT DETAIL

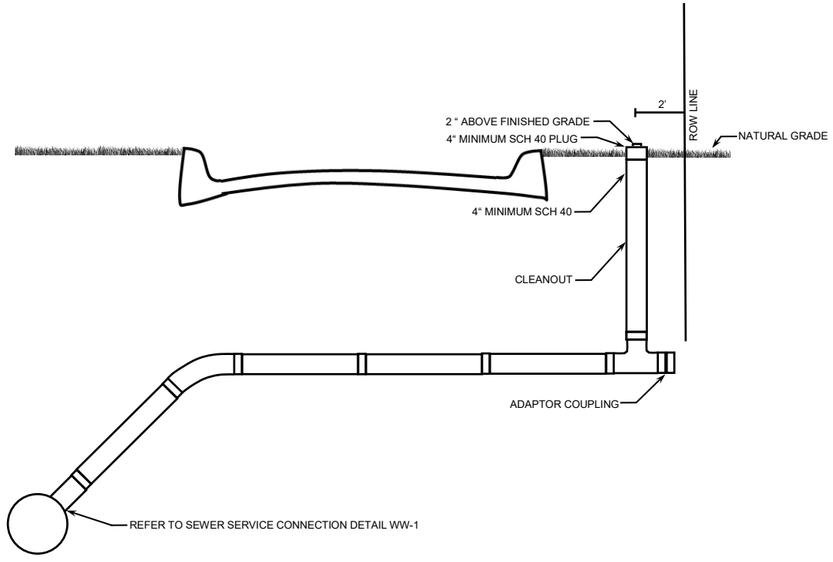

LONG SERVICE LINE CLEAN-OUT DETAIL

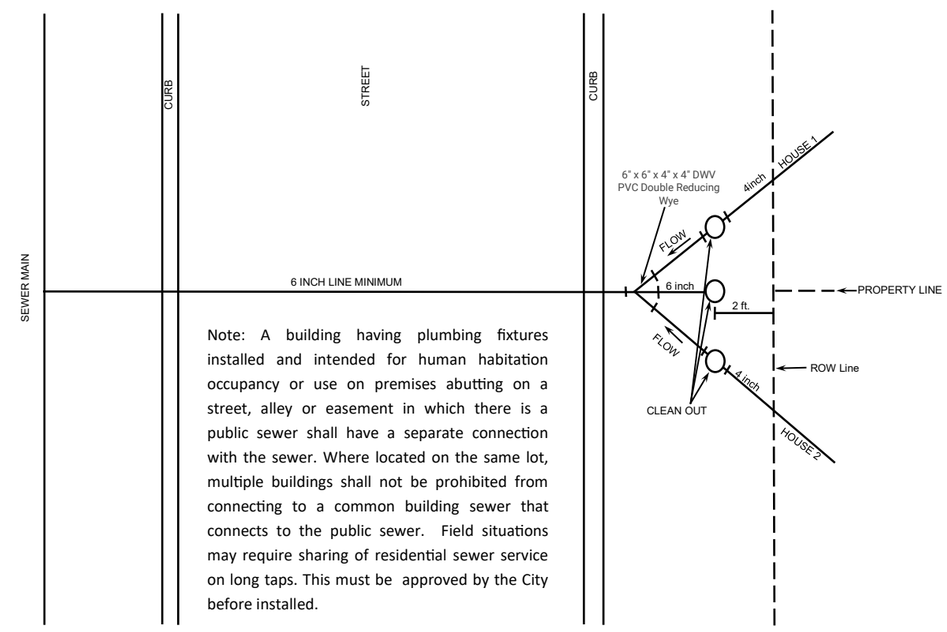

Note: A building having plumbing fixtures installed and intended for human habitation occupancy or use on premises abutting on a street, alley or easement in which there is a public sewer shall have a separate connection with the sewer. Where located on the same lot, multiple buildings shall not be prohibited from connecting to a common building sewer that connects to the public sewer. Field situations may require sharing of residential sewer service on long taps. This must be approved by the City before installed.

TOP VIEW—DOUBLE LONG/SHORT SERVICE LINE CLEAN-OUT DETAIL

EST. 1955 SPRING VALLEY VILLAGE

Texas811 Know what's below. Call before you dig.

CLEAN OUT AND SERVICE LINE LOCATION DETAIL

DETAIL: WW-3

NOTES:

1. A MINIMUM OF 3" PRECAST CONCRETE OR HDPE ADJUSTMENT RING SHALL BE PROVIDED. TOTAL HEIGHT OF ADJUSTMENT RINGS SHALL NOT EXCEED 12".
2. MANHOLE INTERSECTING PIPES SHALL BE INSTALLED ONLY WHEN CALLED FOR IN PLAN AND PROFILE DRAWING.
3. SEAT MANHOLE FRAME IN A WATER TIGHT SEAL.
4. OMIT CEMENT MOTOR WHEN MANHOLE IS LOCATED IN PAVED AREAS.
5. PROVIDE BACKFILL MATERIAL PER ENGINEERING SPECIFICATIONS.
6. MANHOLE RING AND LID SHALL BE ADJUSTED TO FIT THE EXISTING GRADE.

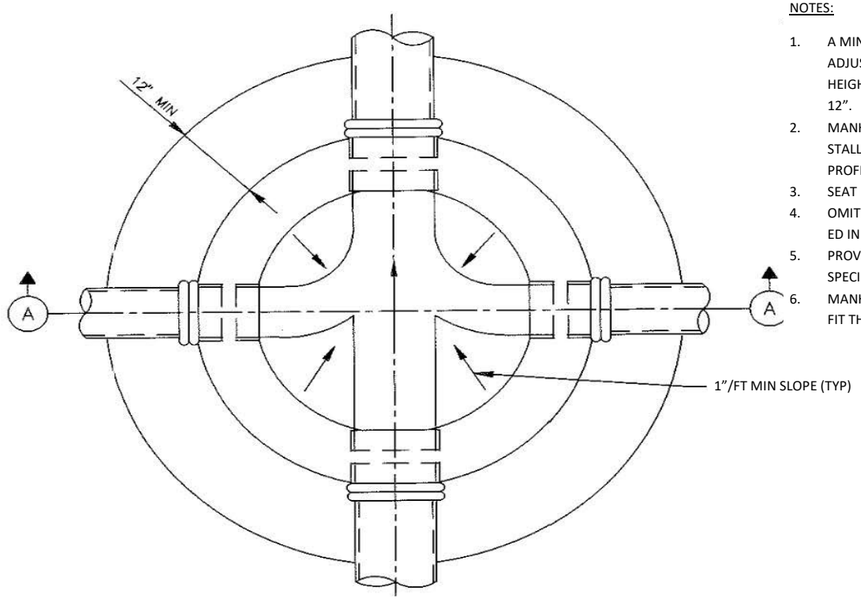

FOUNDATION PLAN

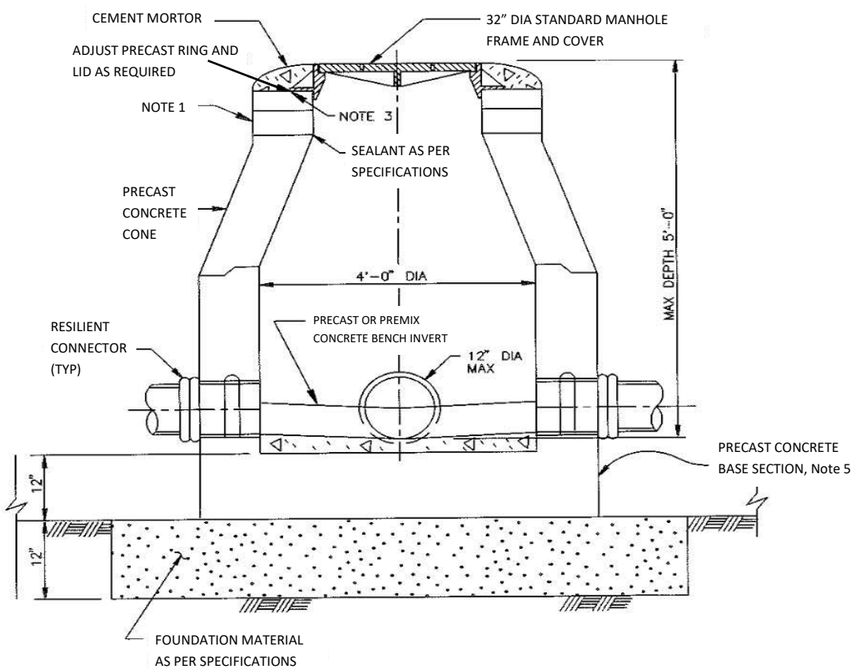

PRECASE SHORT MANHOLE

MANHOLE NOTES

ALL MANHOLES FOR SEWERS SHALL BE LINED WITH A CORROSION RESISTANT COATING APPROVED BY THE CITY

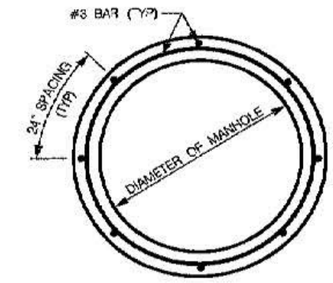

SECTION A-A

(CAGE DETAIL)

RECUIRED NO. OF VERTICAL BARS	DIAMETER OF MANHOLE
6	4'
8	5'
10	6'

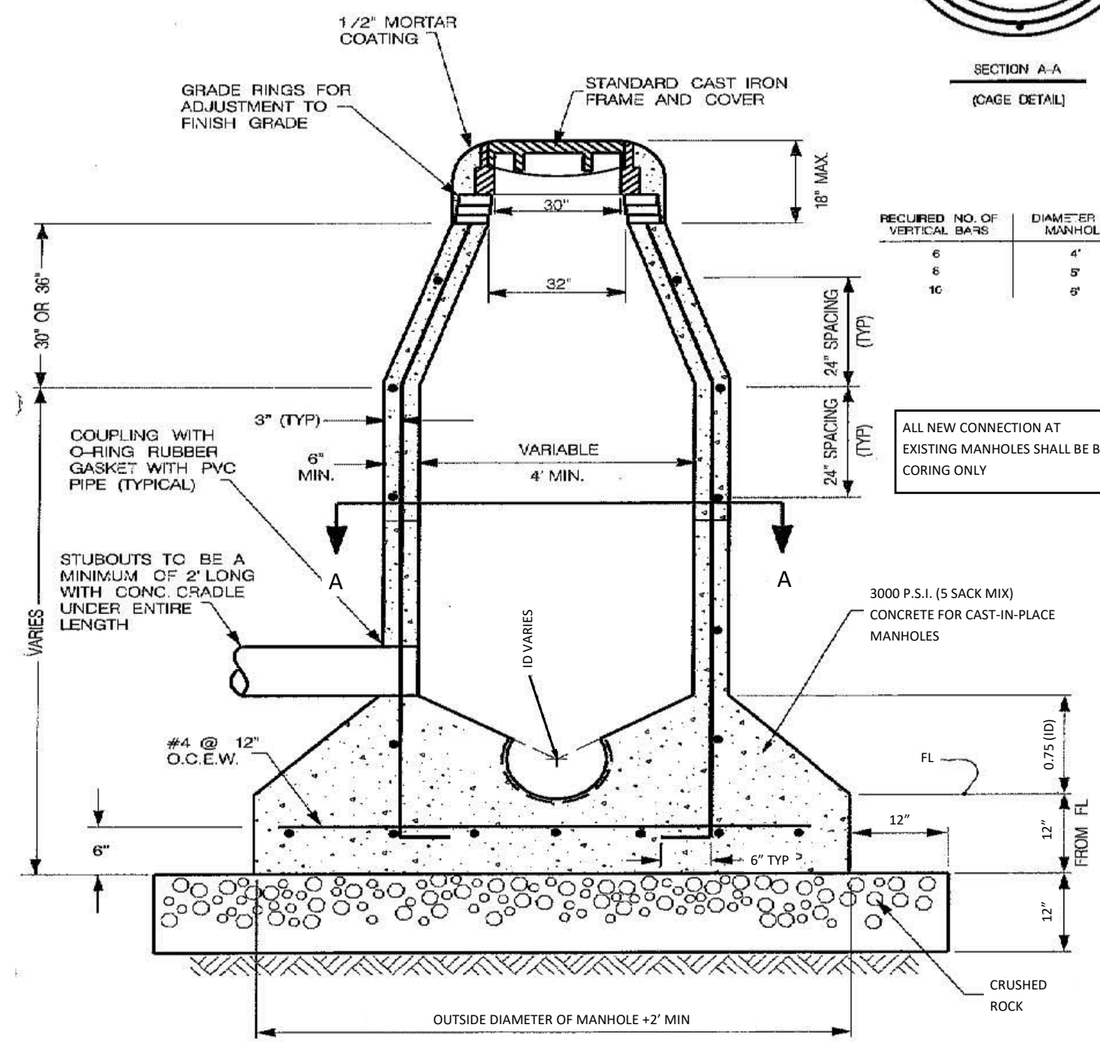

ALL NEW CONNECTION AT EXISTING MANHOLES SHALL BE BY CORING ONLY

CAST IN PLACE

EST. 1955 SPRING VALLEY VILLAGE

Texas811 Know what's below. Call before you dig.

PRECAST & CAST IN PLACE CONCRETE MANHOLES NO OUTSIDE DROP MANHOLES

DETAIL: WW-4

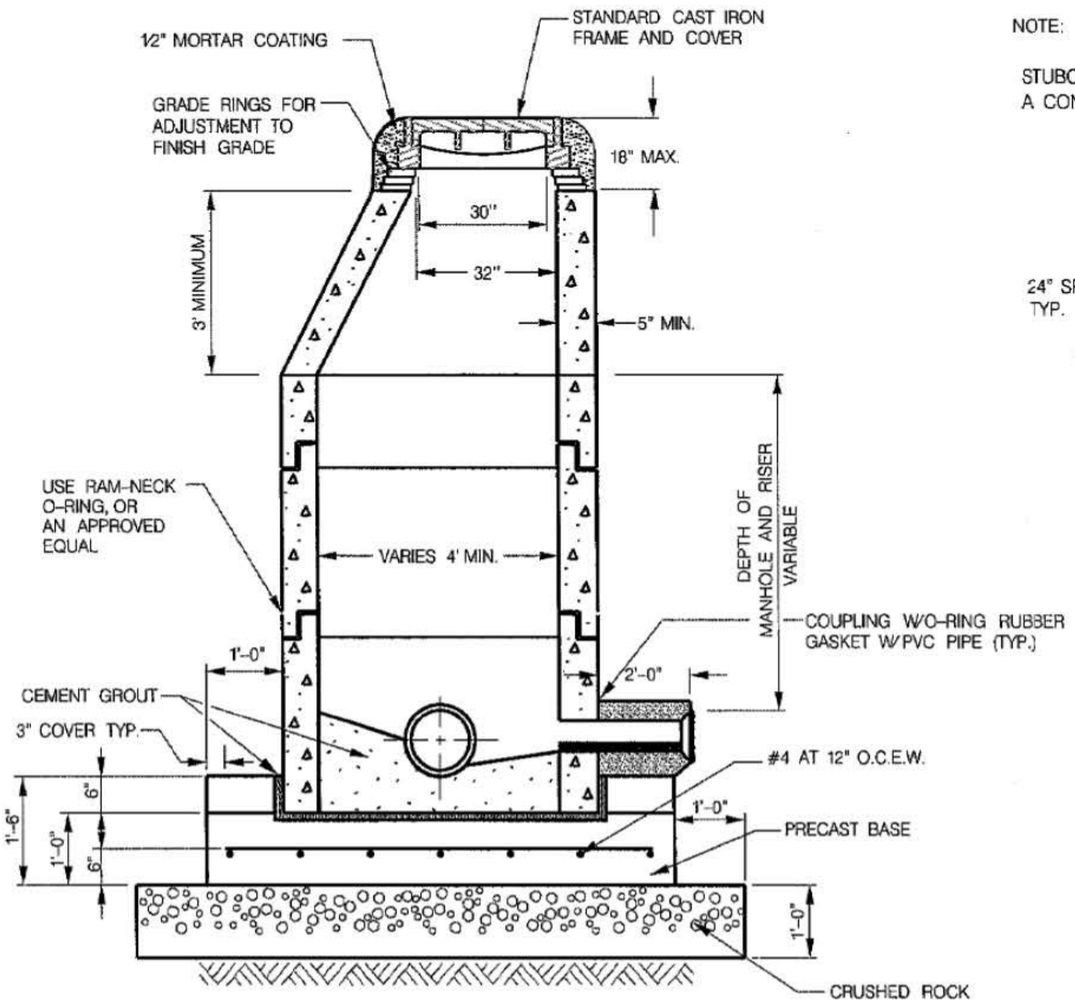

NOTE:

STUBOUTS TO BE A MINIMUM OF 2' LONG WITH A CONCRETE CRADLE UNDER THE ENTIRE LENGTH.

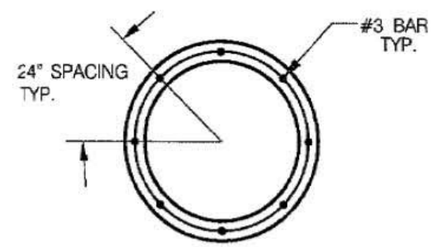

SECTION A – A
(CAGE DETAIL)

NOTE: MANHOLE INFILTRATION CAP TO BE INSTALLED ON MANHOLES WITHIN THE 100 YEAR FLOODPLAIN

MANHOLE NOTES

ALL MANHOLES FOR SEWERS SHALL BE LINED WITH A CORROSION RESISTANT COATING APPROVED BY THE CITY

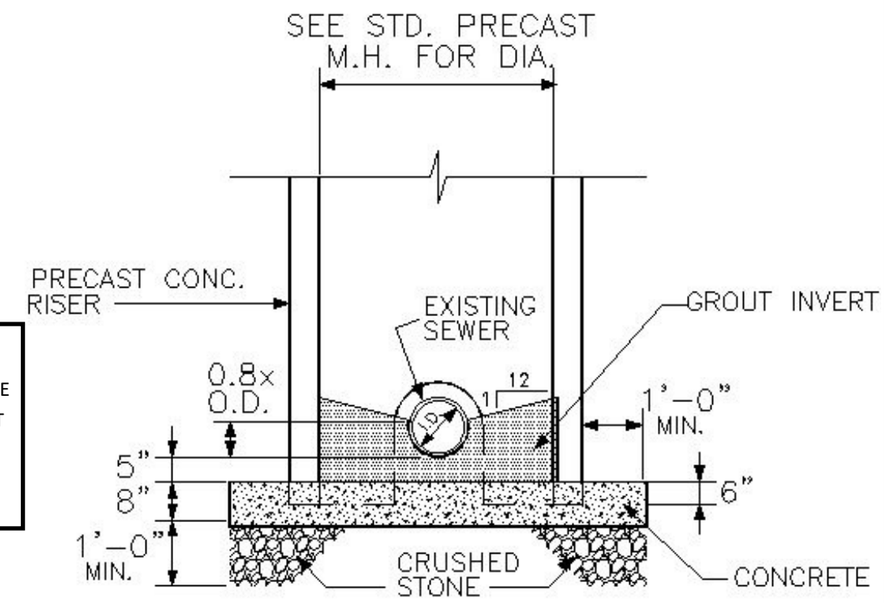

EST. 1955
SPRING VALLEY VILLAGE

Texas811 Know what's below. Call before you dig.

PRECAST CONCENTRIC & BASE MANHOLE

DETAIL: WW-5

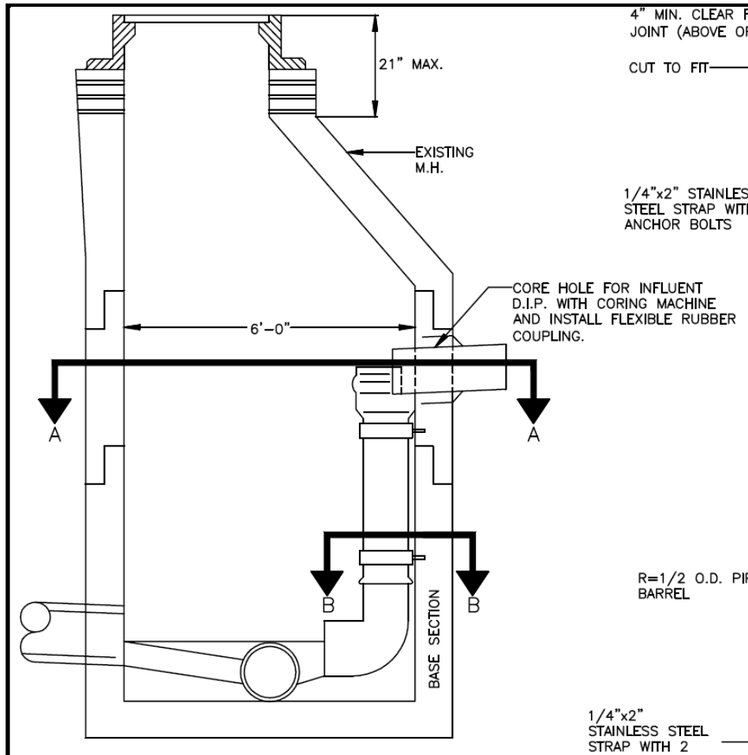

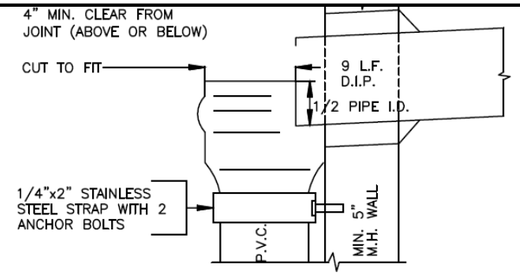

ENLARGED DETAIL

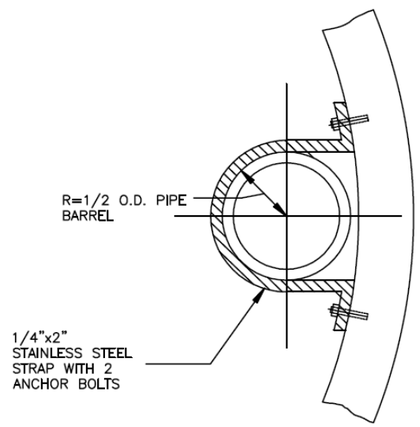

SECTION B-B

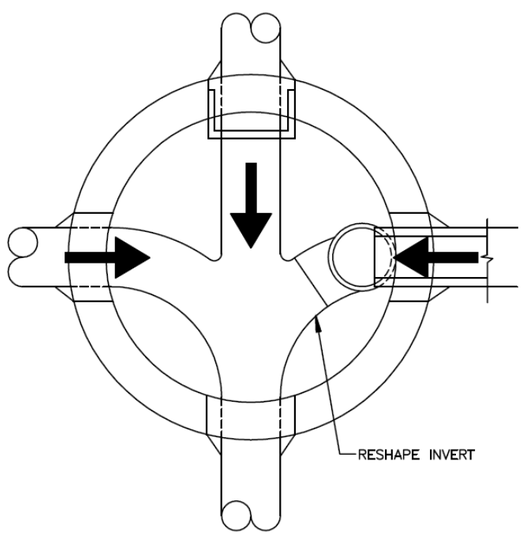

NOTES:

1. PIPE FOR INSIDE DROP SHALL BE SDR 35 PVC CONFORMING TO ASTM SPECIFICATION 03034.
2. BOTTOM BEND TO BE 90° SHORT BEND, BELL SPIGOT, OF SDR 35 PVC. SPIGOT OF BEND TO REST DIRECTLY ON EXISTING SHELF. CONSTRUCT MASONRY TROUGH FROM DROP EFFLUENT TO MAIN CHANNEL.
3. NOTCH BELL OF PVC DROP TO ACCEPT D.I.P. SPIGOT AS SHOWN.
4. LOCATE STRAPS AT PIPE BELL AND ABOVE BELL OF 90° BEND AS SHOWN. ADD EXTRA STRAPS AS NECESSARY TO MAINTAIN MAXIMUM SPACING OF TEN FEET.
5. HOLE IN MANHOLE WALL TO BE MADE WITH A CORING MACHINE. INSTALL FLEXIBLE RUBBER COUPLING.
6. CORE HOLE SHALL NOT ENTER CONE SECTION.
7. STEPS SHALL BE RELOCATED IF THEY CONFLICT WITH INSIDE DROP.

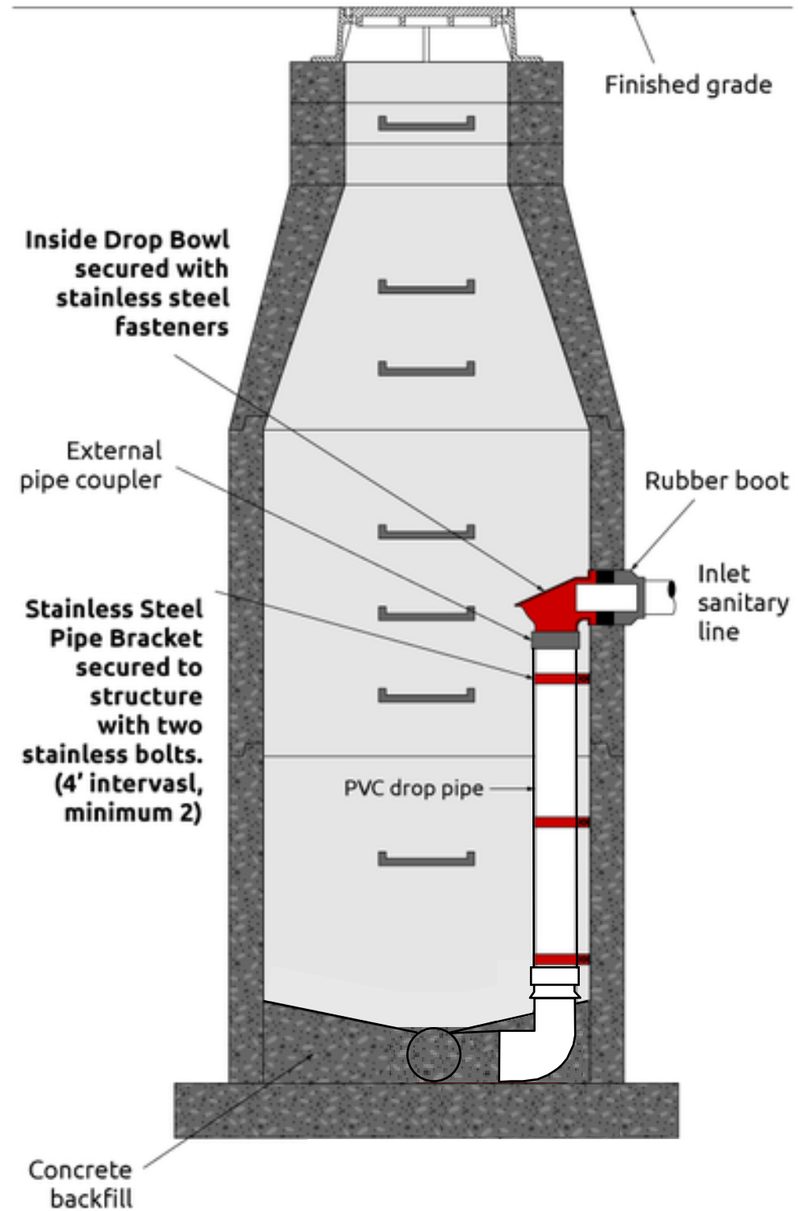

NOTE: ALL MANHOLES FOR SEWERS SHALL BE LINED WITH A CORROSION RESISTANT COATING APPROVED BY THE CITY.

EST. 1955 SPRING VALLEY VILLAGE

Texas 811 Know what's below. Call before you dig.

DROP MANHOLE DETAIL

DETAIL: WW-6

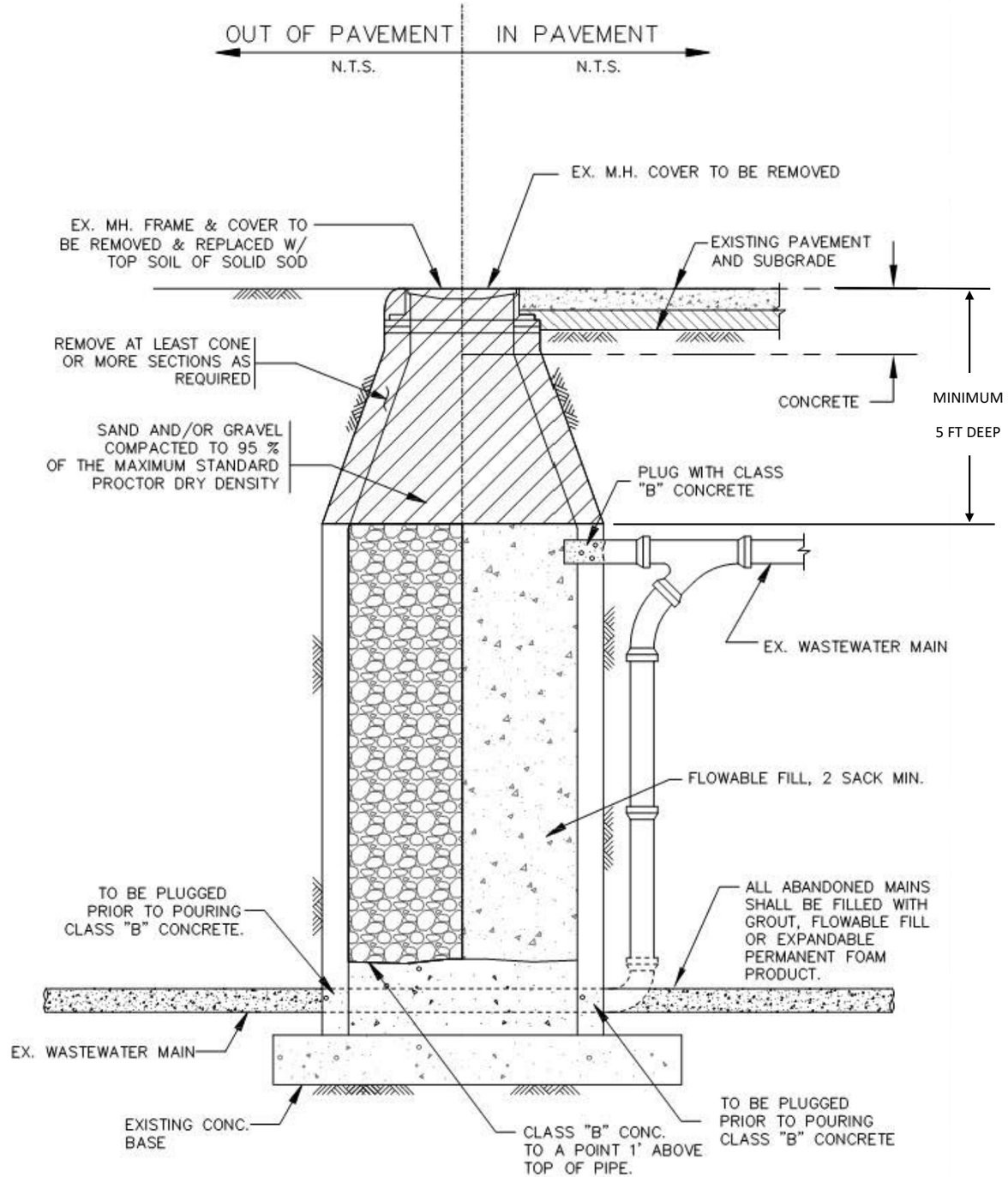

EST. 1955
SPRING VALLEY
VILLAGE

Texas811
Know what's below. Call before you dig.

MANHOLE ABANDONMENT IN PLACE

DETAIL: WW-7

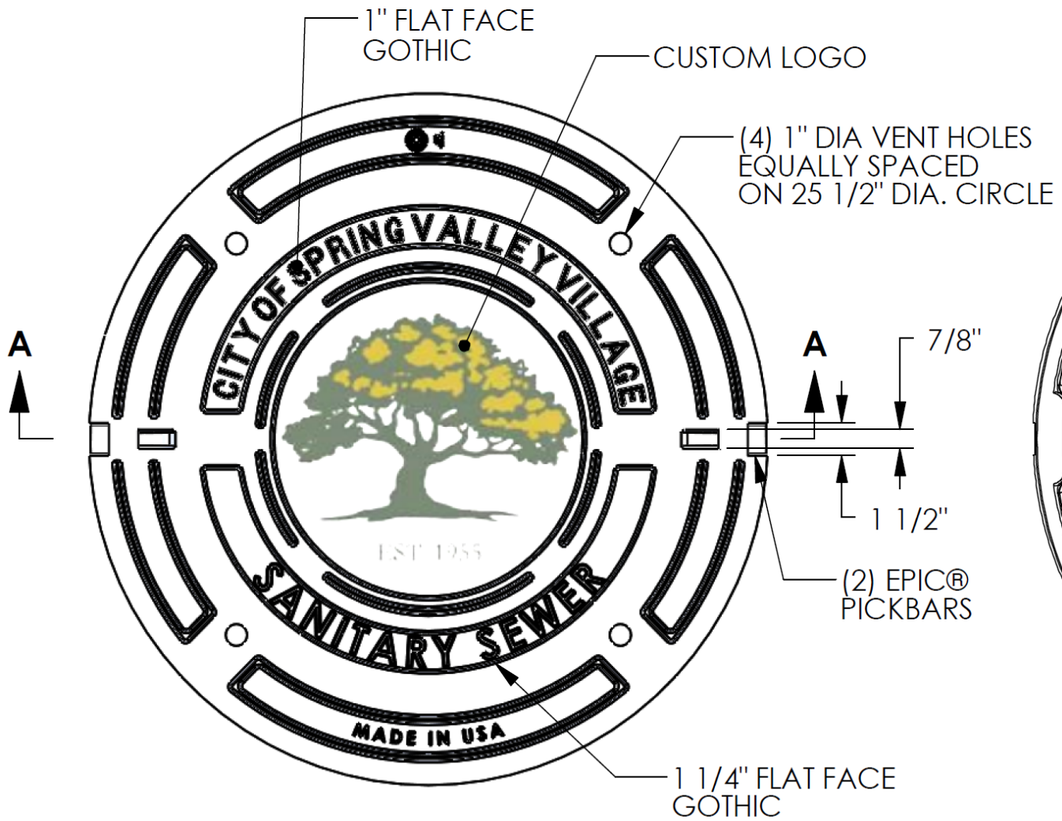

NOTE: LOGO NOT COLORED ON ACTUAL CASTING

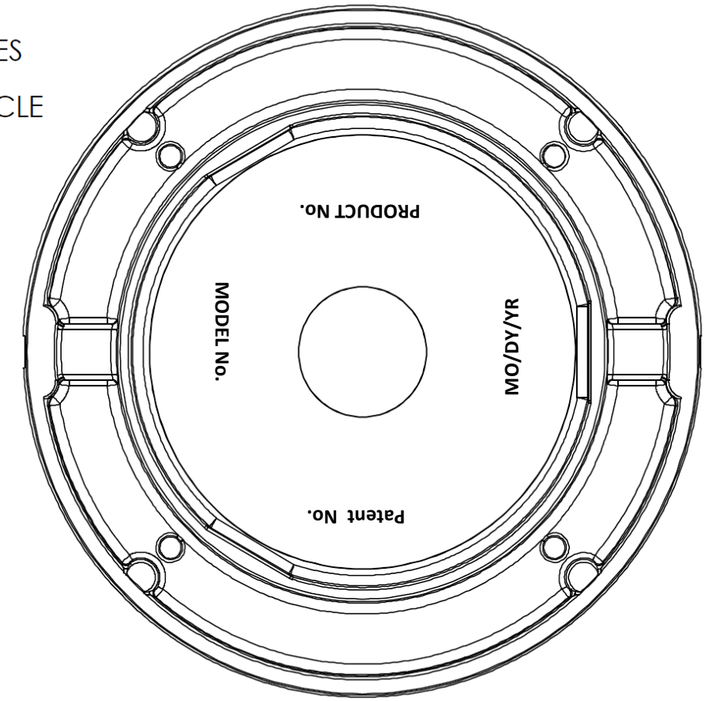

BOTTOM VIEW

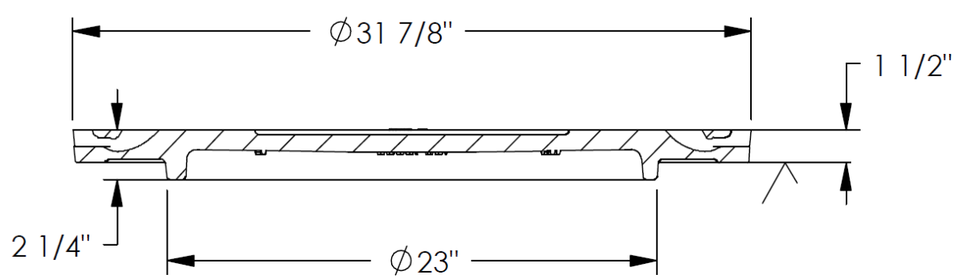

SECTION A-A

PERMISSION GRANTED TO THE CITY OF SPRING VALLEY VILLAGE BY EAST JORDAN IRON WORKS TO USE THIS DESIGN.

EST. 1955
SPRING VALLEY
VILLAGE

Texas811
Know what's below. Call before you dig.

31 7/8" SEWER MANHOLE LID WITH LOGO

DETAIL: WW-8

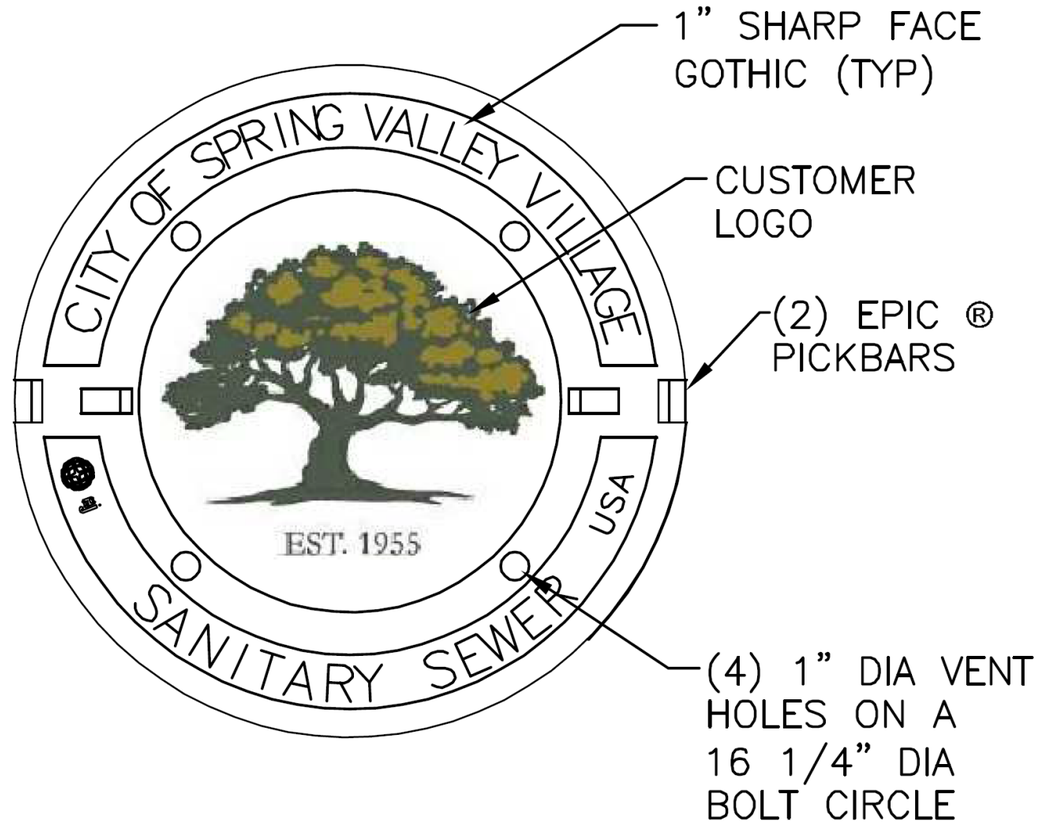

NOTE: LOGO NOT COLORED ON ACTUAL CASTING

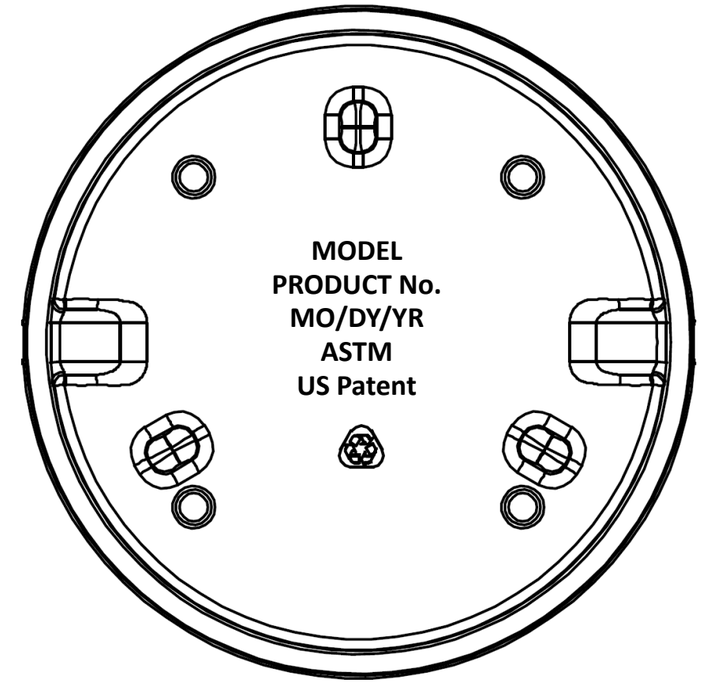

BOTTOM VIEW

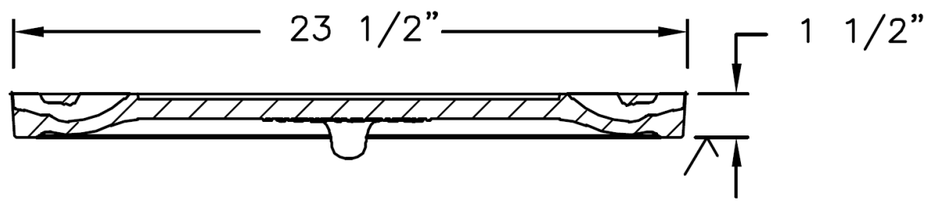

SECTION

PERMISSION GRANTED TO THE CITY OF SPRING VALLEY VILLAGE BY EAST JORDAN IRON WORKS TO USE THIS DESIGN.

EST. 1955 SPRING VALLEY VILLAGE

Texas811 Know what's below. Call before you dig.

23 1/2" SEWER MANHOLE LID WITH LOGO (ONLY FOR EXISTING MANHOLES)

DETAIL: WW-9

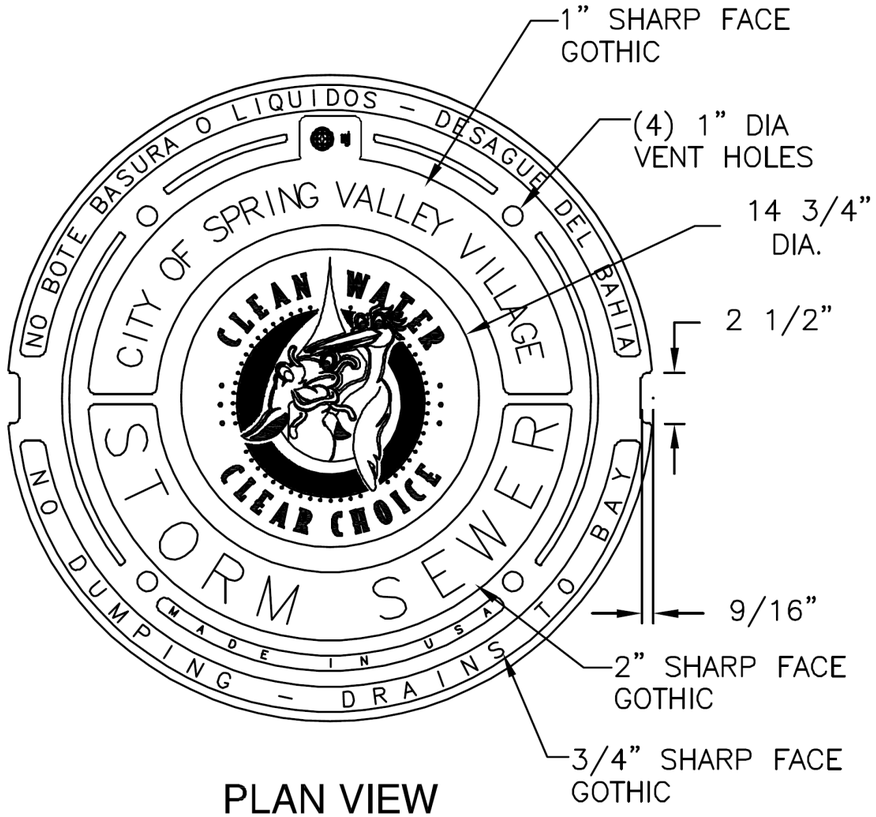

PLAN VIEW

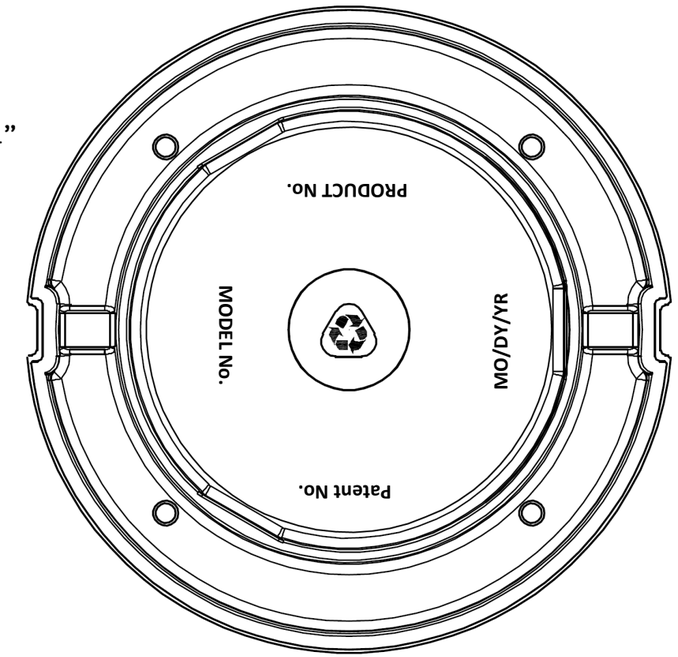

BOTTOM VIEW OF COVER

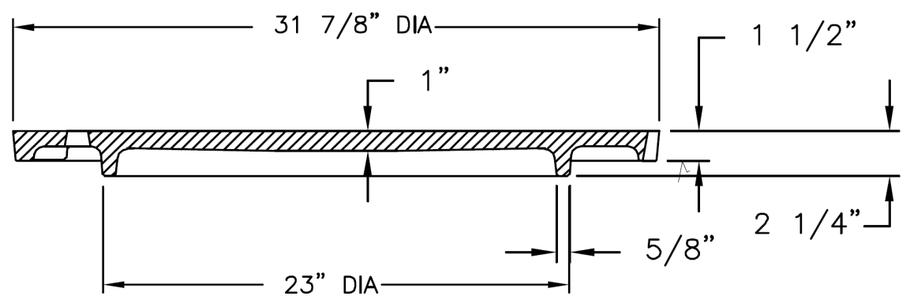

COVER SECTION

PERMISSION GRANTED TO THE CITY OF SPRING VALLEY VILLAGE BY EAST JORDAN IRON WORKS TO USE THIS DESIGN.

EST. 1955 SPRING VALLEY VILLAGE

Texas811 Know what's below. Call before you dig.

31 7/8" STORMSEWER MANHOLE LID WITH LOGO

DETAIL: WW-10

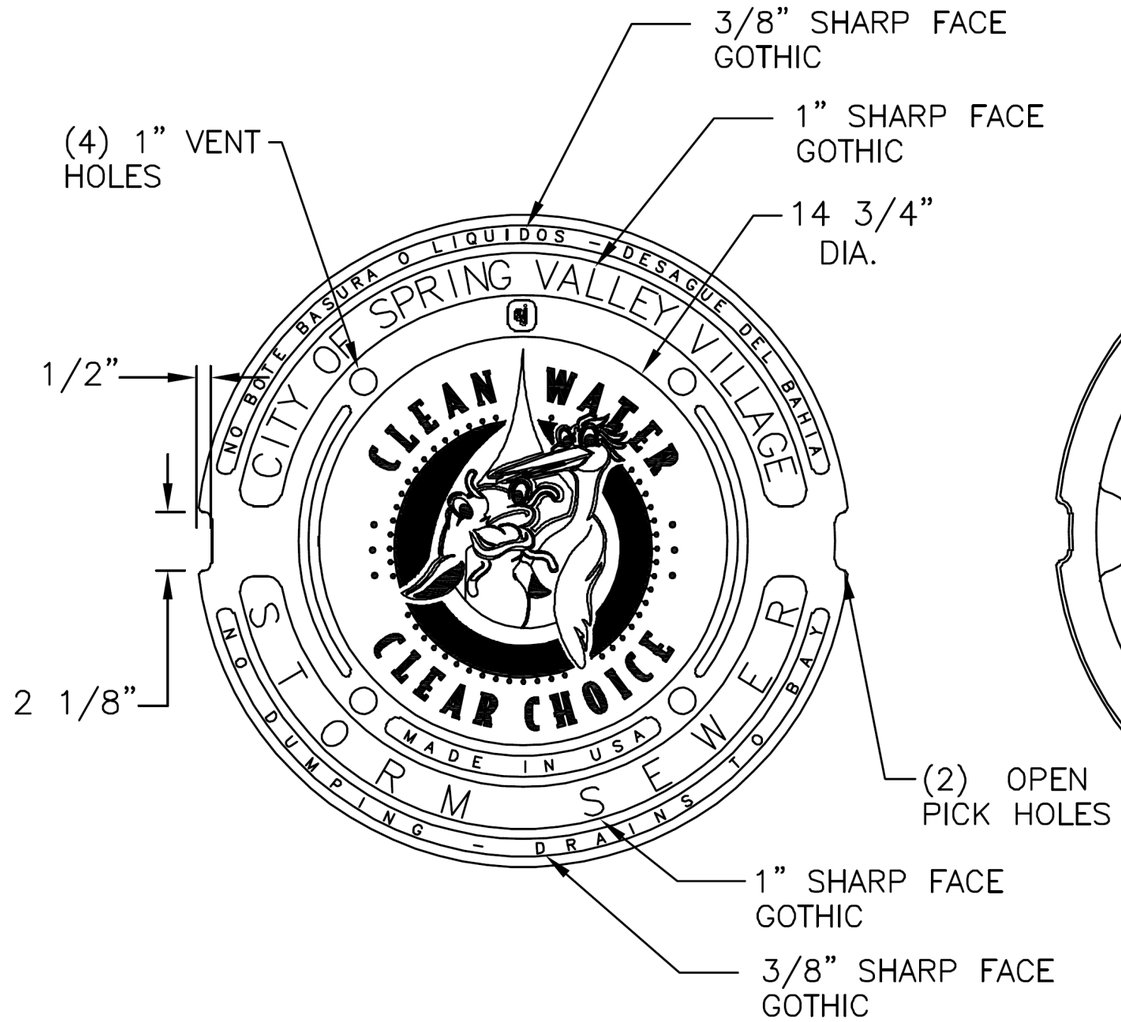

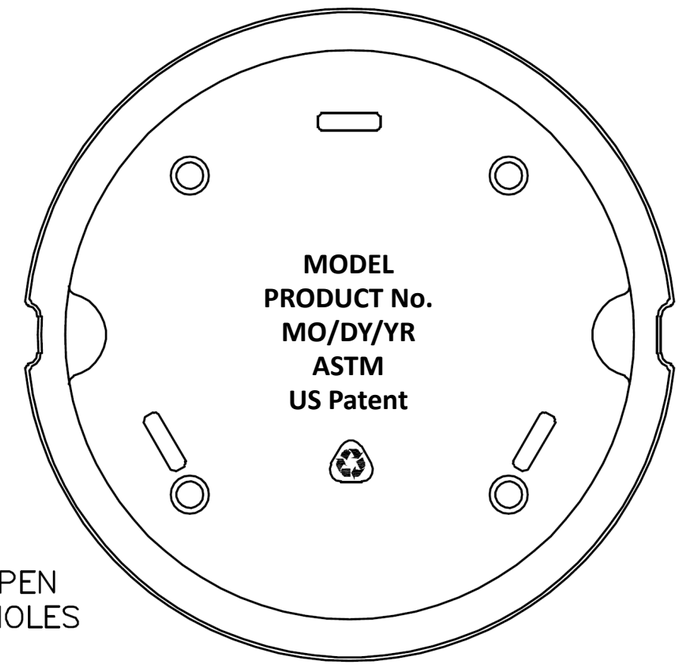

BOTTOM VIEW

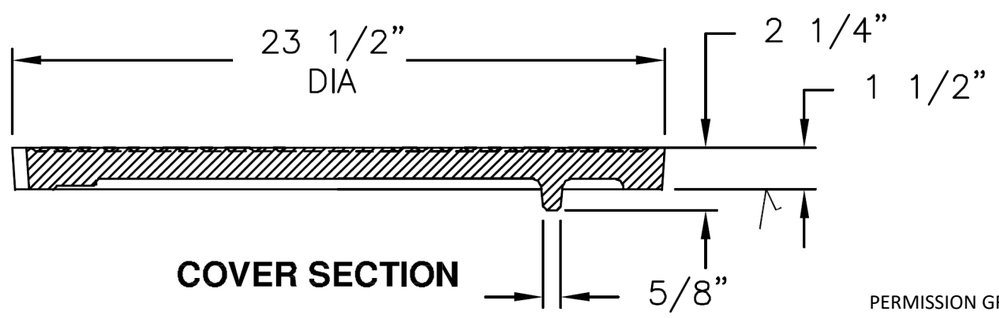

COVER SECTION

PERMISSION GRANTED TO THE CITY OF SPRING VALLEY VILLAGE BY EAST JORDAN IRON WORKS TO USE THIS DESIGN.

EST. 1955 SPRING VALLEY VILLAGE

Texas811 Know what's below. Call before you dig.

23 1/2" STORMSEWER MANHOLE LID WITH LOGO (ONLY FOR EXISTING MANHOLES)

DETAIL: WW-11

NOTE: DETAIL FOR CITY PAVEMENT & UTILITY PROJECTS WHERE THE WATER MAIN OR CUSTOMER WATER SERVICE LINE IS REPLACED AS PART OF THE PROJECT IN THE ROW.

NOTES:

1. IRRIGATION METER SHALL BE LOCATED ON THE SIDE OF DOMESTIC METER WITH INCREASING ADDRESSES.
2. THE BACKFLOW SHALL BE INSTALLED BETWEEN THE METER AND THE HOUSE AND BEFORE ANY CONNECTIONS ON THE LINE ACCORDING TO TCEQ AND CITY ADOPTED PLUMBING CODE STANDARDS.
3. THE BACKFLOW HAS TO BE TESTED WHEN INSTALLED AND TESTED PERIODICALLY ACCORDING TO TCEQ AND CITY REQUIREMENTS.
4. THE BACKFLOW WILL NEED TO BE INSTALLED AT AN ACCESSIBLE LOCATION.
5. DEVICES MUST BE INSTALLED ACCORDING TO TCEQ AND CITY ADOPTED PLUMBING CODE REQUIREMENTS.

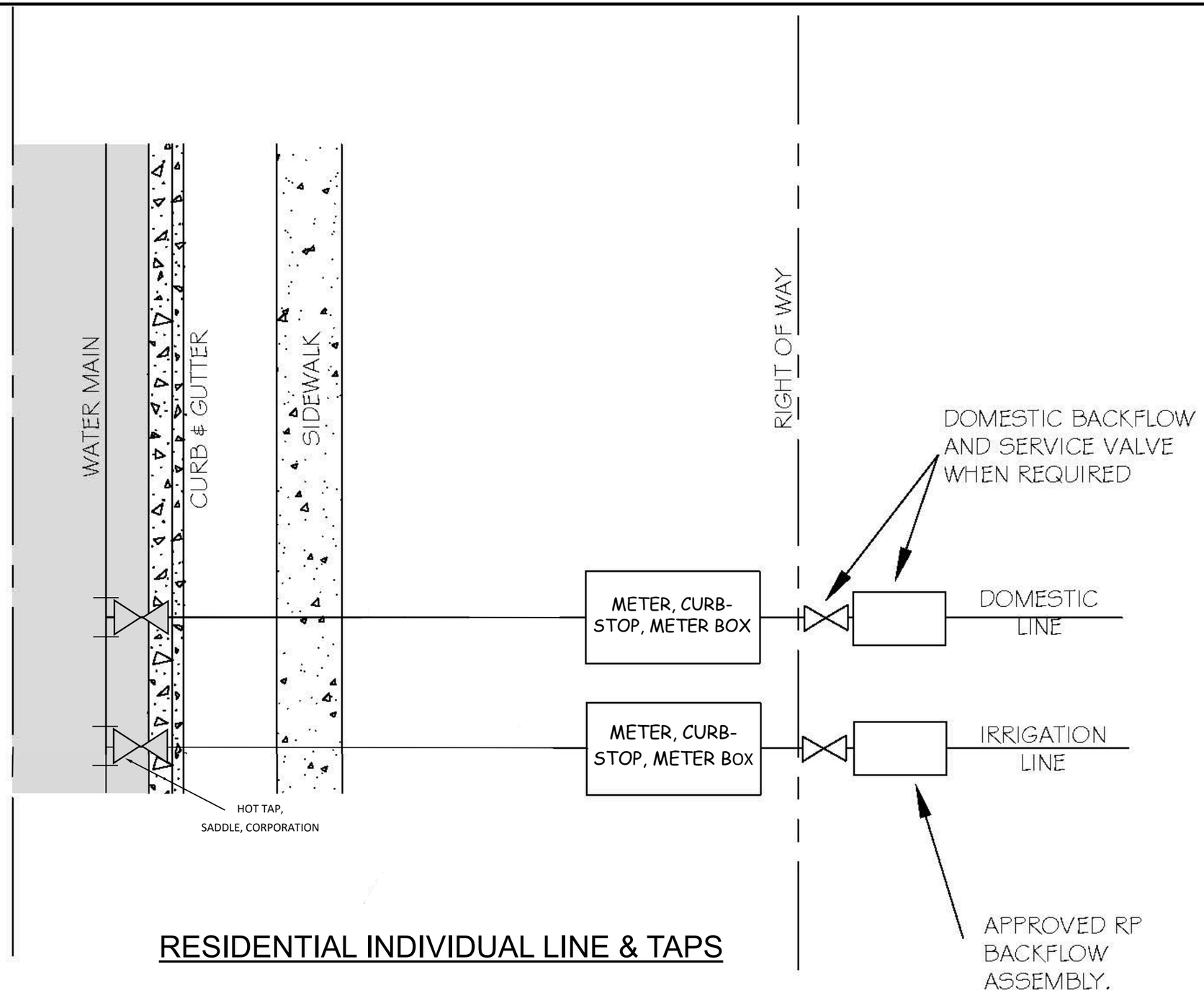

RESIDENTIAL INDIVIDUAL LINE & TAPS

EST. 1955 SPRING VALLEY VILLAGE

Texas811 Know what's below. Call before you dig.

METER SETS

DETAIL: W-1

DOUBLE METER SET SHORT

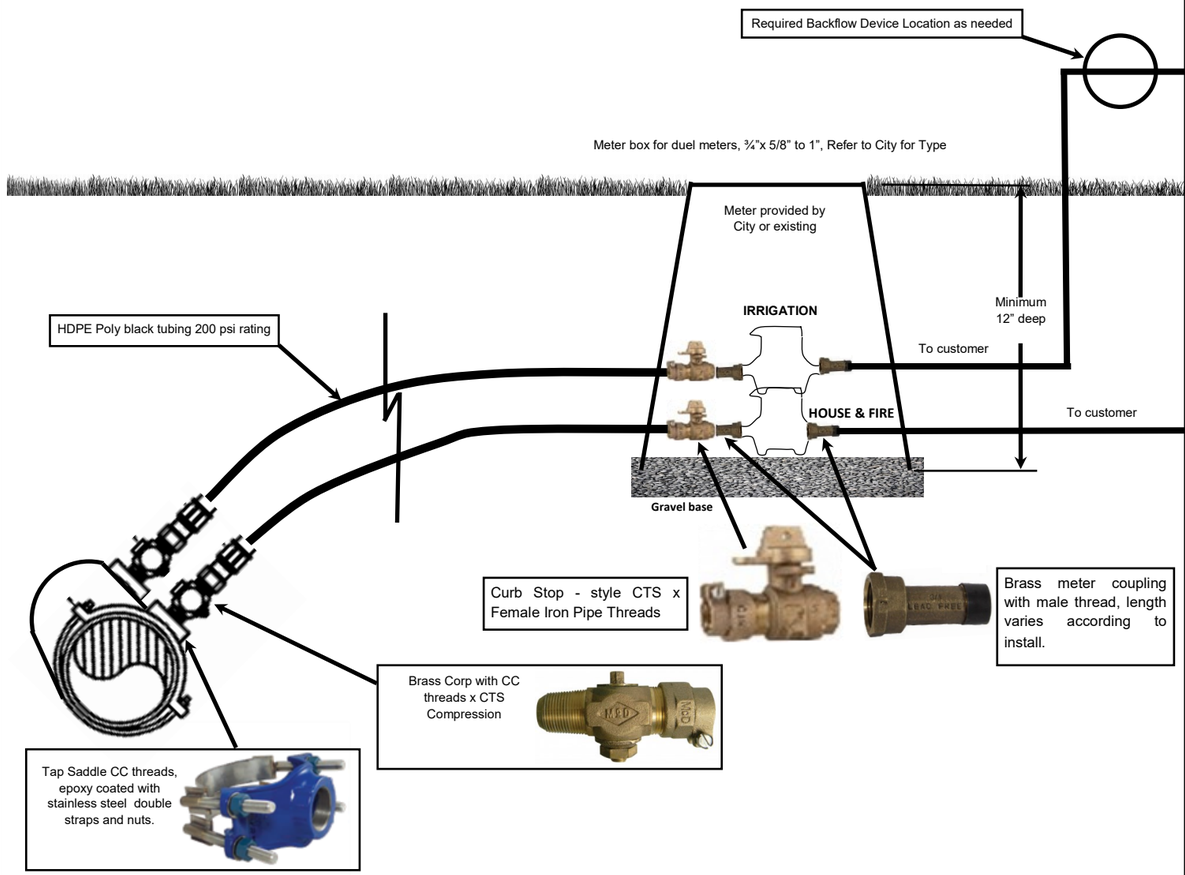

DOUBLE METER SET LONG

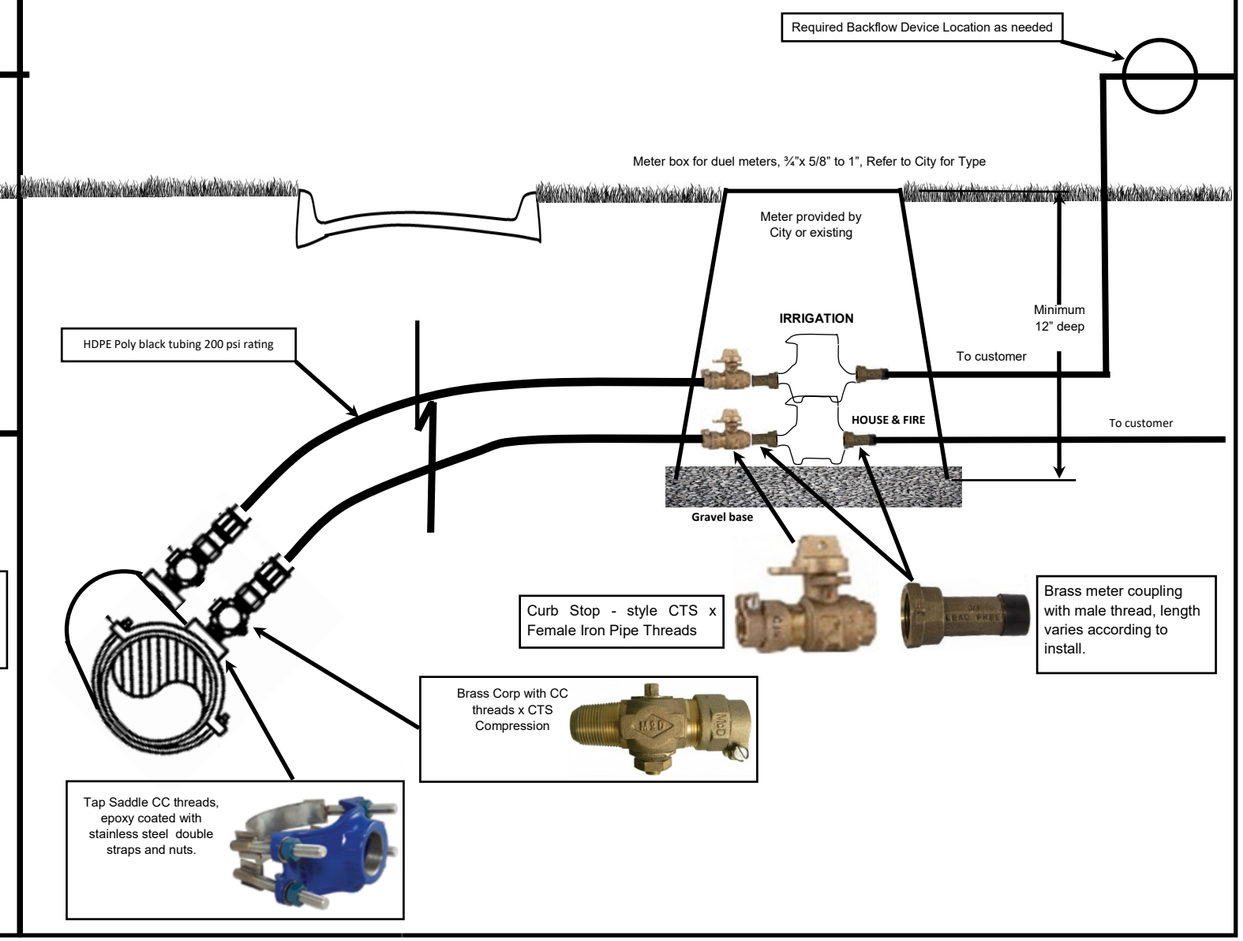

NOTE:

1. DETAIL FOR CITY PAVEMENT & UTILITY PROJECTS WHERE THE WATER MAIN OR CUSTOMER SERVICE LINE IS REPLACED AS PART OF THE PROJECT IN THE ROW.
2. FOR NEW TAPS ON AN EXISTING WATER LINES NOT PART OF A CITY PROJECT, CITY WILL INSTALL THE WATER TAP. TAP FEES WILL APPLY ACCORDING TO THE CURRENT PROVISIONS OF ARTICLE 6.000 - UTILITY SERVICE CHARGES ORDINANCE.
3. FOR A CITY PROJECT REQUIRING A NEW METER, THE METER SHALL BE PURCHASED OR SUPPLIED THROUGH THE CITY TO INSURE COMPATIBILITY WITH THE CURRENT METER READING SYSTEM.
4. IF THE METER IS NOT INSTALLED IMMEDIATELY AND IF A METER IS NEEDED, THE LINE OR CURB WILL BE CAPPED TO PREVENT ANY CONTAMINANTS FROM ENTERING THE CITY SYSTEM.

EST. 1955 SPRING VALLEY VILLAGE

Texas811 Know what's below. Call before you dig.

DOUBLE WATER TAP & METER SET

DETAIL: W-2

SINGLE METER SERVICE SHORT

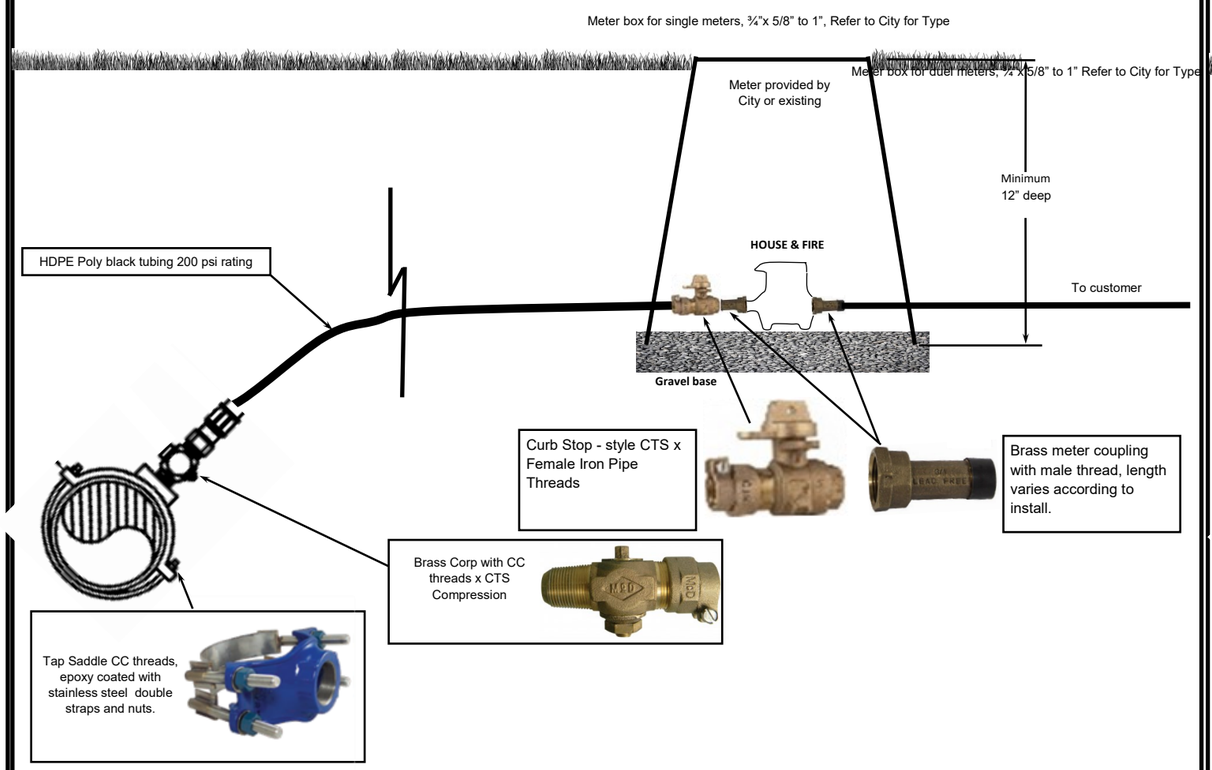

SINGLE METER SERVICE LINE LONG

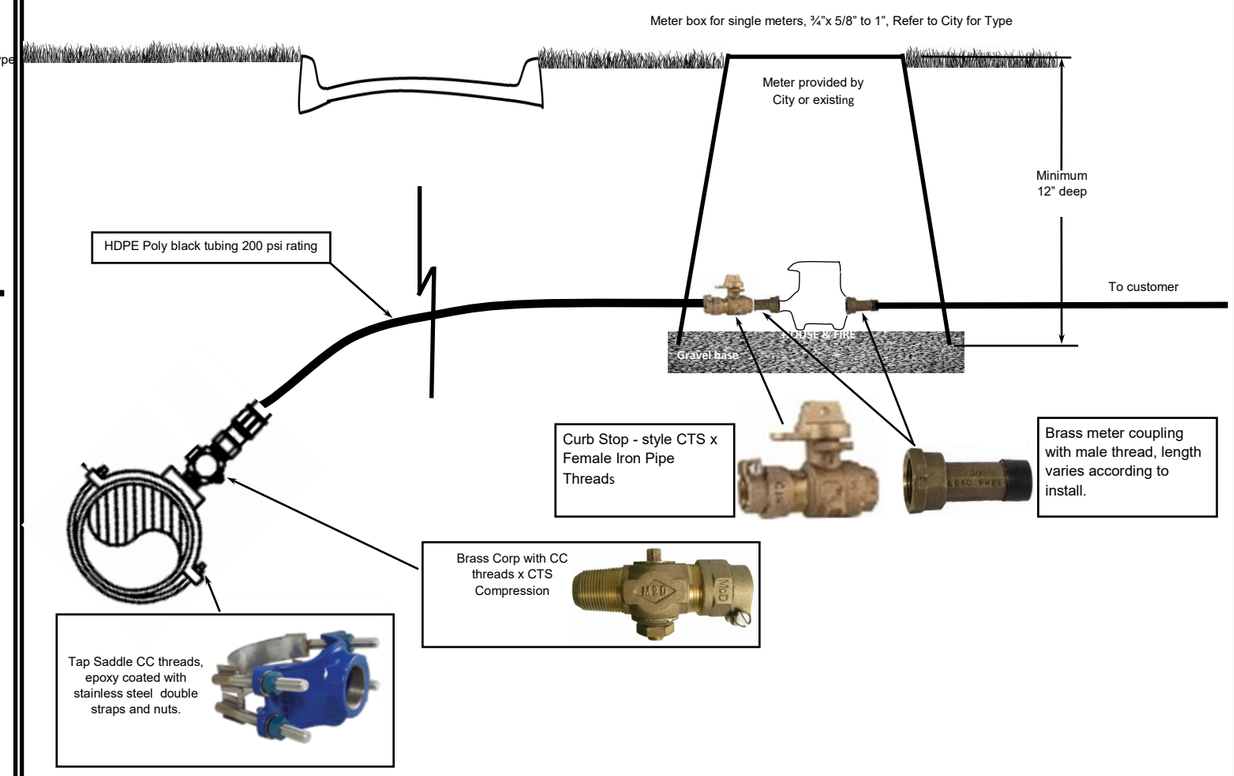

NOTE:

1. DETAIL FOR CITY PAVEMENT & UTILITY PROJECTS WHERE THE WATER MAIN OR CUSTOMER SERVICE LINE IS REPLACED AS PART OF THE PROJECT IN THE ROW.
2. FOR NEW TAPS ON AN EXISTING WATER LINES NOT PART OF A CITY PROJECT, CITY WILL INSTALL THE WATER TAP. TAP FEES WILL APPLY ACCORDING TO THE CURRENT PROVISIONS OF ARTICLE 6.000 - UTILITY SERVICE CHARGES ORDINANCE.
3. FOR A CITY PROJECT REQUIRING A NEW METER, THE METER SHALL BE PURCHASED OR SUPPLIED THROUGH THE CITY TO INSURE COMPATIBILITY WITH THE CURRENT METER READING SYSTEM.
4. IF THE METER IS NOT INSTALLED IMMEDIATELY AND IF A METER IS NEEDED, THE LINE OR CURB WILL BE CAPPED TO PREVENT ANY CONTAMINANTS FROM ENTERING THE CITY SYSTEM.

EST. 1955 SPRING VALLEY VILLAGE

Texas811 Know what's below. Call before you dig.

SINGLE TAP & METER SET

DETAIL: W-3

DOUBLE METER SET LONG, SINGLE SERVICE LINE

NOTE: SINGLE WATER TAPS ARE PREFERED, HOWEVER, SINGLE SERVICE LINE WITH DOUBLE METER SETS MAY BE UTILIZED IF THE DESIGN ENGINEER APPROVES.

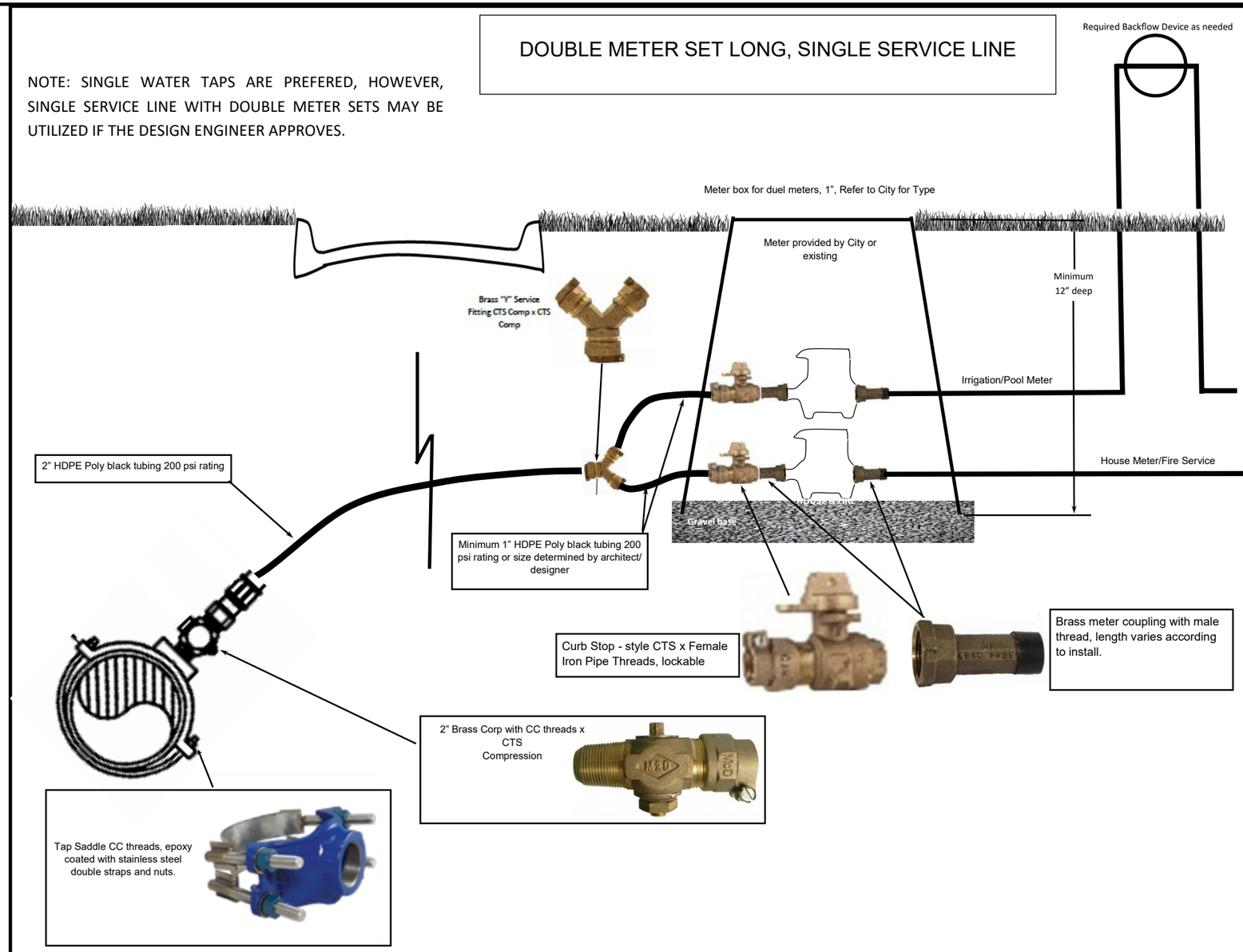

NOTE:

1. DETAIL FOR CITY PAVEMENT & UTILITY PROJECTS WHERE THE WATER MAIN OR CUSTOMER SERVICE LINE IS REPLACED AS PART OF THE PROJECT IN THE ROW.
2. FOR NEW TAPS ON AN EXISTING WATER LINES NOT PART OF A CITY PROJECT, CITY WILL INSTALL THE WATER TAP. TAP FEES WILL APPLY ACCORDING TO THE CURRENT PROVISIONS OF ARTICLE 6.000 - UTILITY SERVICE CHARGES ORDINANCE.
3. FOR A CITY PROJECT REQUIRING A NEW METER, THE METER SHALL BE PURCHASED OR SUPPLIED THROUGH THE CITY TO INSURE COMPATIBILITY WITH THE CURRENT METER READING SYSTEM.
4. IF THE METER IS NOT INSTALLED IMMEDIATELY AND IF A METER IS NEEDED, THE LINE OR CURB WILL BE CAPPED TO PREVENT ANY CONTAMINANTS FROM ENTERING THE CITY SYSTEM.

EST. 1955 SPRING VALLEY VILLAGE

Texas 811 Know what's below. Call before you dig.

LONG TAP SINGLE SERVICE LINE DOUBLE METER SET

DETAIL: W-4

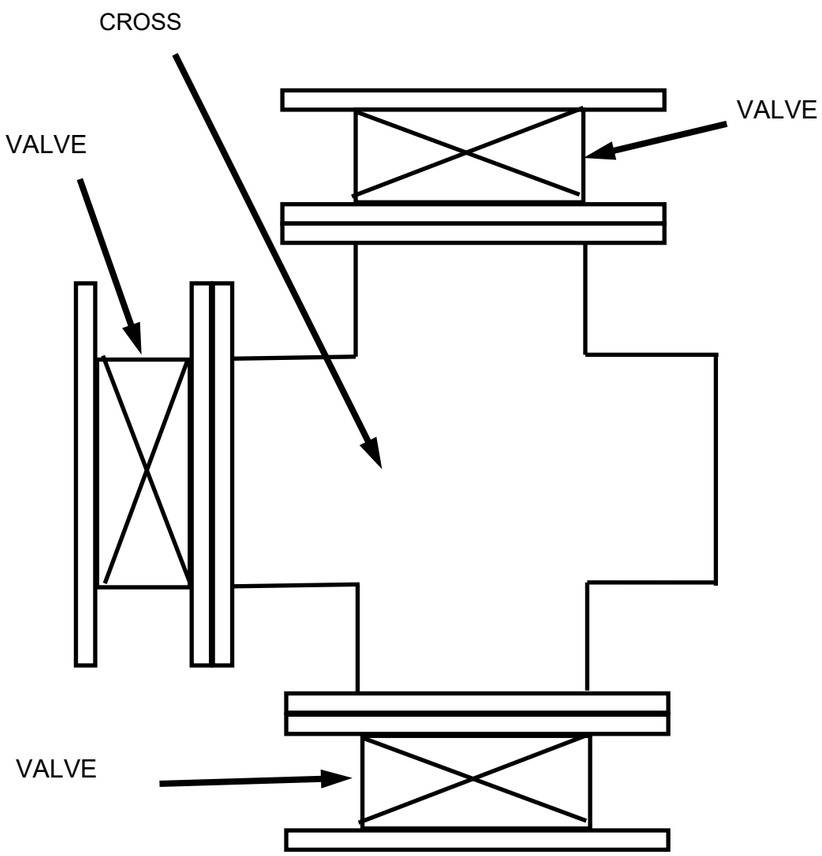

VALVES ON FOUR-WAY

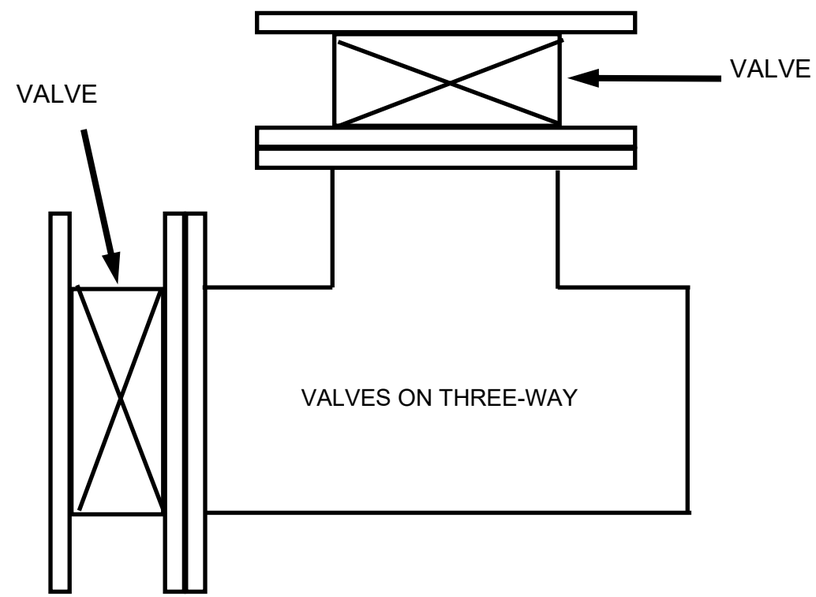

VALVES ON THREE-WAY

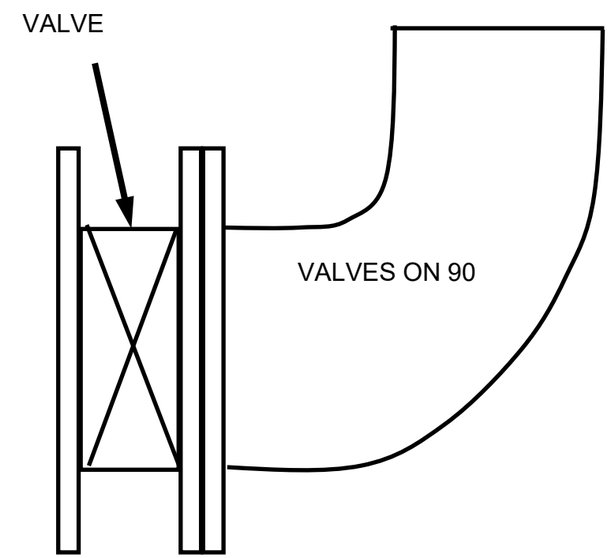

VALVES ON 90

NOT TO SCALE

EST. 1955
SPRING VALLEY
VILLAGE

Texas811
Know what's below. Call before you dig.

VALVE PLACEMENT ON CITY MAINS

DETAIL: W-5

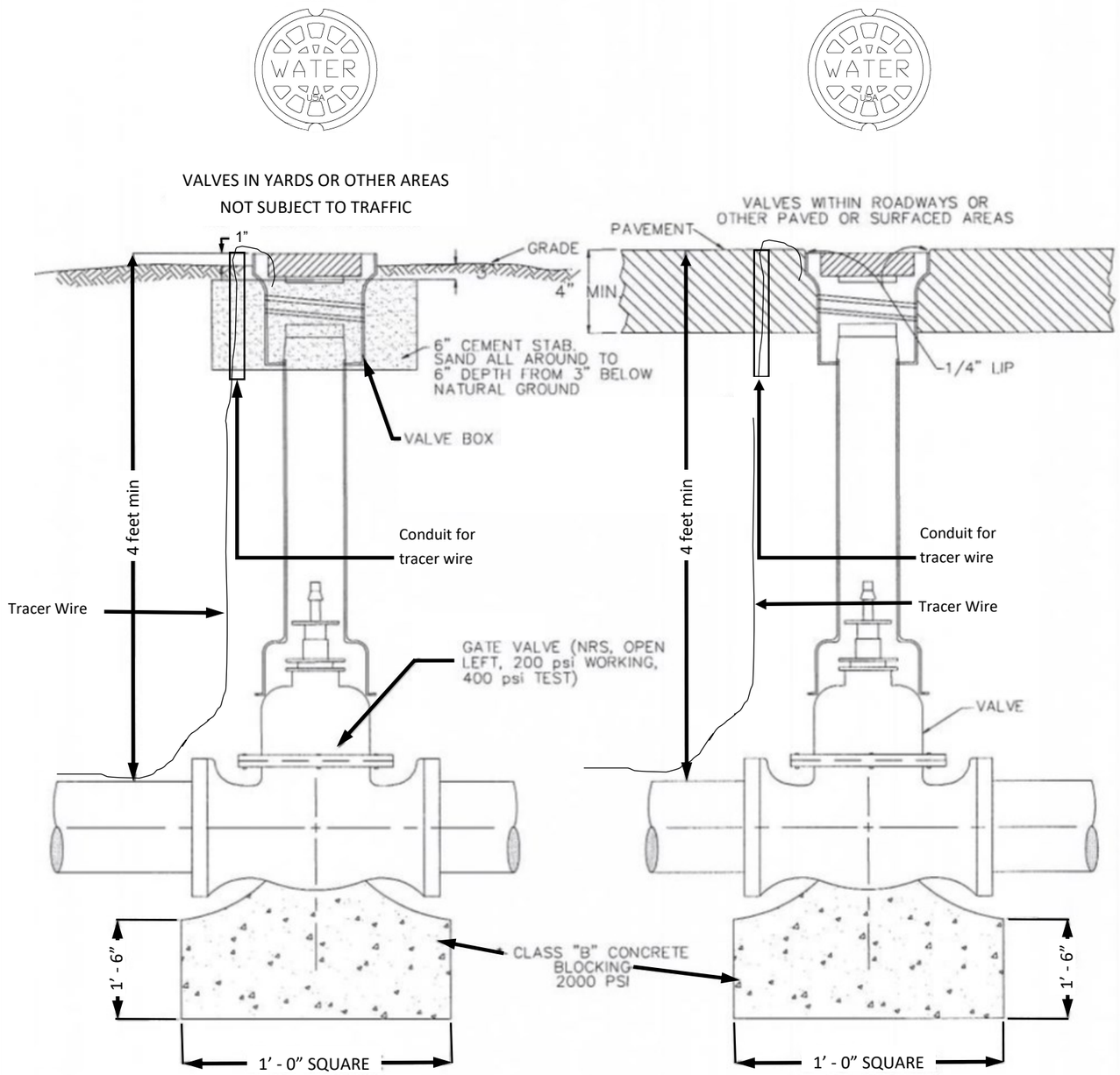

* BLOCK GATE VALVES WITH COMPRESSION JOINT FITTINGS ON 8" & LARGER LINES

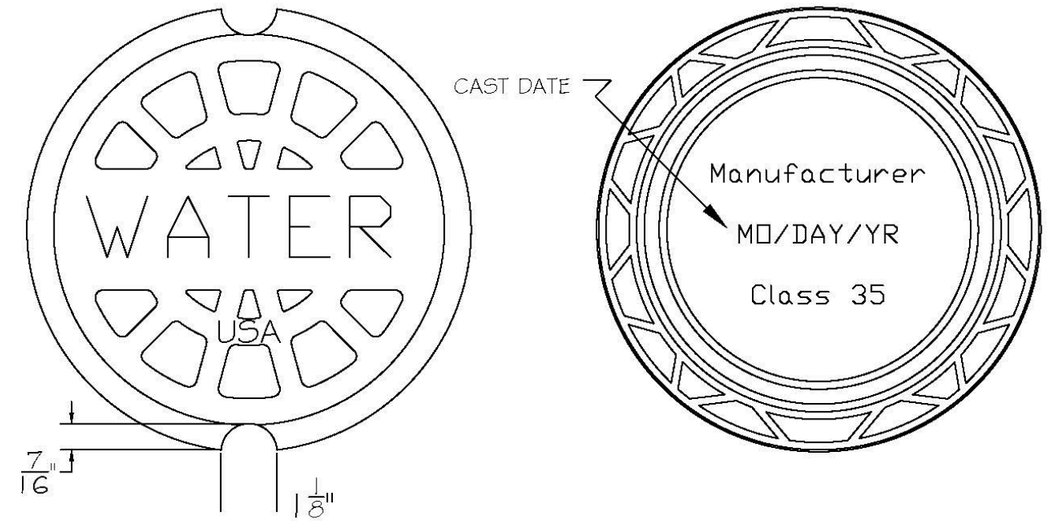

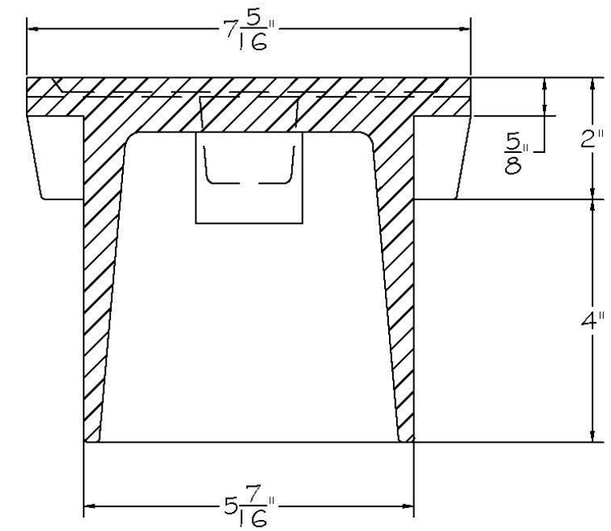

SECTION VIEW

WATER VALVES TO BE PAINTED WITH RUST-OLEUM 7724830 Stops Rust Spray Paint, Gloss Sail Blue

NOT TO SCALE

Note: Tracer Wires may not be required

NOTE 1 - "WATER" LETTERING MUST BE 1" RAISED (RECESSED FLUSH)
NOTE 2 - VALVE COVER SHALL BE DOMESTICALLY CAST.
NOTE 3 - COVER MUST HAVE A MINIMUM WEIGHT OF 25 POUNDS.
NOTE 4 - COVER MUST BE CLASS 35 OR GREATER.
NOTE 5 - COVER MUST MEET OR EXCEED AASHTO H-20 LOAD REQUIREMENTS.

EST. 1955
SPRING VALLEY
VILLAGE

Texas811
Know what's below. Call before you dig.

VALVE BOX DETAIL WITH TRACER WIRE (IF APPLICABLE)

DETAIL: W-6

NOT TO SCALE

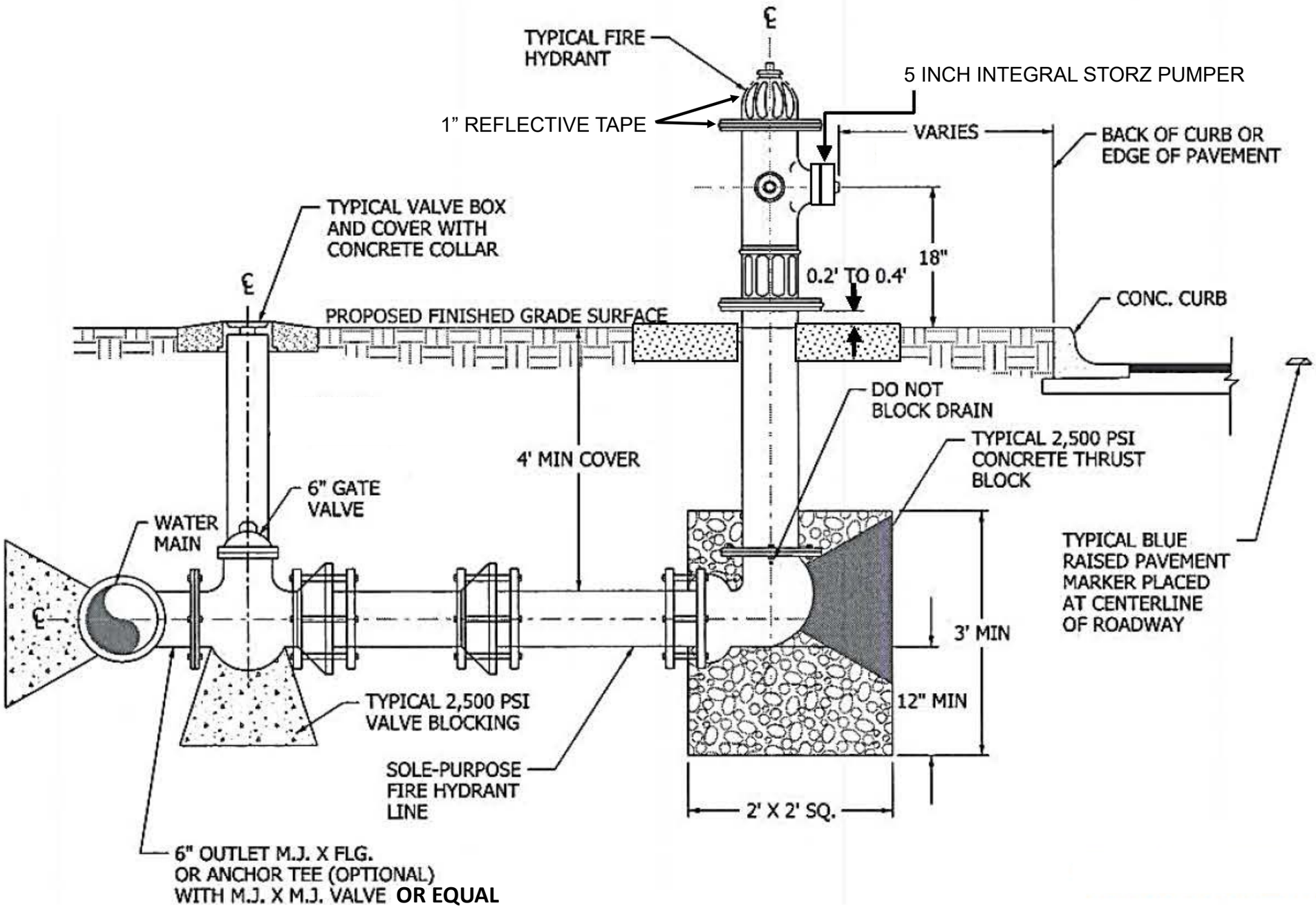

EST. 1955
SPRING VALLEY
VILLAGE

Texas811
Know what's below. Call before you dig.

TYPICAL FIRE HYDRANT INSTALL

DETAIL: FH-1

1. Fire hydrants shall meet or exceed all applicable requirements of the latest revisions of ANSI/AWWA Standard C502. Fire hydrants shall be UL 246 Listed, FM 1510 Approved and certified to ANSI/NSF 61 & 372.
2. Fire hydrants shall have a UL – FM – AWWA Water Working Pressure (WWP) rating of 350 psig (24 barg). Fire hydrants shall be production pressure tested in the fully closed and fully open positions to 700 psig (48 barg). Fire hydrants shall be UL and FM proof-of-design tested at 1400 psig (96 barg).
3. Fire hydrants shall be of the compression type, opening against the pressure and closing with the pressure.
4. Fire hydrants shall have a minimum 5-1/4” main valve opening and a nominal inside lower/upper barrel diameter (I.D.) of 6.9” to assure maximum flow performance. Pressure loss at 1,000 GPM shall not exceed the following values:
   - 4” Pumper Nozzle: 2.70 psi
   - 4.5” Pumper Nozzle: 2.50 psi
5. Fire hydrants shall be three-way in design, having one 5” integral STORZ pumper nozzle with latching cap and two 2-1/2” NTS threaded hose nozzles. Nozzles shall thread counterclockwise into hydrant barrel utilizing O-ring seals. A suitable nozzle lock shall be in place to prevent inadvertent nozzle removal. Nozzle caps shall be secured to the hydrant by a galvanized chain that meets ASTM A-467-64 Class MT.
6. The bonnet assembly shall provide an oil reservoir and lubrication system that automatically circulates lubricant to all stem threads and bearing surfaces each time the hydrant is operated. The bonnet shall have a service plug to facilitate oil replacement when the hydrant is serviced. This lubrication system shall be sealed from the waterway and any external contaminants by use of O-ring seals. An anti-friction washer shall be in place above the thrust collar to further minimize operating torque. The oil reservoir shall be factory filled with a low viscosity, non-toxic, NSF H1 Approved Hydrant Lubricant which will remain fluid through a temperature range of -40^0 F. to $+150^0$ F.
7. The operating nut shall be a one-piece design, manufactured of ASTM B62 or B584 bronze. Operating nut shape and dimensions shall be as specified by the end user. The operating nut shall be affixed to the bonnet by means of an ASTM B62 or B584 bronze hold down nut. The hold down nut shall be threaded into the bonnet in such a manner as to prevent accidental disengagement during the opening cycle of the hydrant. The use of set screws as a means of retention is unacceptable. A resilient weather seal shall be incorporated into the hold down nut, for the purpose of protecting the operating mechanism from the elements.
8. The direction of the opening shall be left to open. An arrow and the letter L shall be cast on the bonnet flange to indicate the specified opening direction.
9. A stainless steel tag shall be attached to the upper barrel of the hydrant that indicates the hydrant bury depth. The tag shall be designed so that it is still readable after multiple hydrant paintings.
10. The hydrant bonnet shall be attached to the upper barrel by not less than eight bolts and nuts and sealed by an O-ring.
11. Hydrants shall be a “traffic-model” having upper and lower barrels joined at the ground line by a separate and breakable “swivel” (traffic) flange providing 360^0 rotation of upper barrel for proper nozzle facing. Traffic flange shall employ not less than eight bolts. Traffic flange segments shall be located under the upper barrel flange to prevent the segments from falling into the lower barrel when the hydrant is struck. Traffic flange shall be tested by an independent certified testing agency to assure proper function under low speed impact.
12. The upper and lower barrels shall have an O-ring pressure seal between the barrels. The proper ground line shall be cast clearly on the lower barrel and shall provide not less than 18” of clearance from the centerline of the lowest nozzle to the ground.

EST. 1955 SPRING VALLEY VILLAGE	Texas811 Know what's below. Call before you dig.	**FIRE HYDRANT SPECIFICATIONS**	DETAIL: FH-2

13. The operating stem shall consist of two pieces, not less than 1-1/4” diameter (excluding threaded or machined areas) and shall be connected by a stainless steel safety coupling.
14. Operating stems shall be protected from corrosion by electrophoretic coating (e-coat) or FBE (powder coat).
15. The stem coupling shall have an integral internal stop to prevent the coupling from sliding down into the lower barrel when the hydrant is struck. The stem coupling shall be designed to break on traffic impact and so that impacted pieces shall not fall into the hydrant main valve. Proof of design impact testing to be performed at a certified independent test facility.
16. The lower barrel shall be an integrally cast unit composed of ASTM A126 Class B grey iron or ASTM A536 ductile iron. The use of threaded flanges or flanges mechanically attached to barrels or pipe is deemed unacceptable. The hydrant bury depth shall be clearly marked on the hydrant lower barrel.
17. Main Valve shall be constructed of an iron core encapsulated in molded rubber having a Shore A Durometer hardness of 95 +/- 5 and shall be reversible in design to provide a spare in place, it also shall be rated for 350PSI on either side of the main valve. Plastic (polyurethane) main valves are unacceptable. The main valve shall have a cross section not less than 1”.
18. Hydrants shall be equipped with (2) two drain valves which drain the barrel when the hydrant is closed and seal per AWWA C502 requirements when the hydrant is opened. These drain valves shall be an integral part of the one-piece bronze upper valve plate. They shall operate without the use of springs, toggles, tubes, levers or other intricate synchronizing mechanisms.
19. The upper valve plate, seat ring and drain ring (shoe bushing) must be ASTM B62 or B584 lead free bronze alloys and work in conjunction to form an all bronze drain way. A minimum of two (2) internal and two (2) external drain openings are required. Drains ported through an iron shoe are not permitted.
20. The bronze seat ring shall thread into a bronze drain ring (or shoe bushing) providing a bronze to bronze threaded connection. Seat rings shall be O-ring pressure sealed.
21. The hydrant shoe shall be ASTM A536 ductile iron; inlet size and connection type shall be as specified (Flanged, MJ, etc.), having ample blocking pads for sturdy setting and the MJ connection must have two strapping lugs to secure the hydrant to piping. A minimum of six bolts and nuts is required to fasten the shoe to the lower barrel.
22. The interior of the shoe including the lower valve plate and stem cap nut shall have a protective coating that meets the requirements of AWWA C-550. If a stem cap nut is utilized, it must be locked in place by a stainless steel lock washer or similar non-corrosive device that will prevent the cap nut from backing-off during normal use.
23. Hydrants shall be warranted by the manufacturer against defects in materials or workmanship for a period of ten years (10) from the date of manufacture. The manufacturing facility for the hydrant must have current ISO certification.
24. Exposed portions of the hydrant including the exterior of the bonnet, upper barrel and hose caps, shall be factory coated with a polyurethane enamel paint . (Safety Red). Do not paint the STORZ connection.

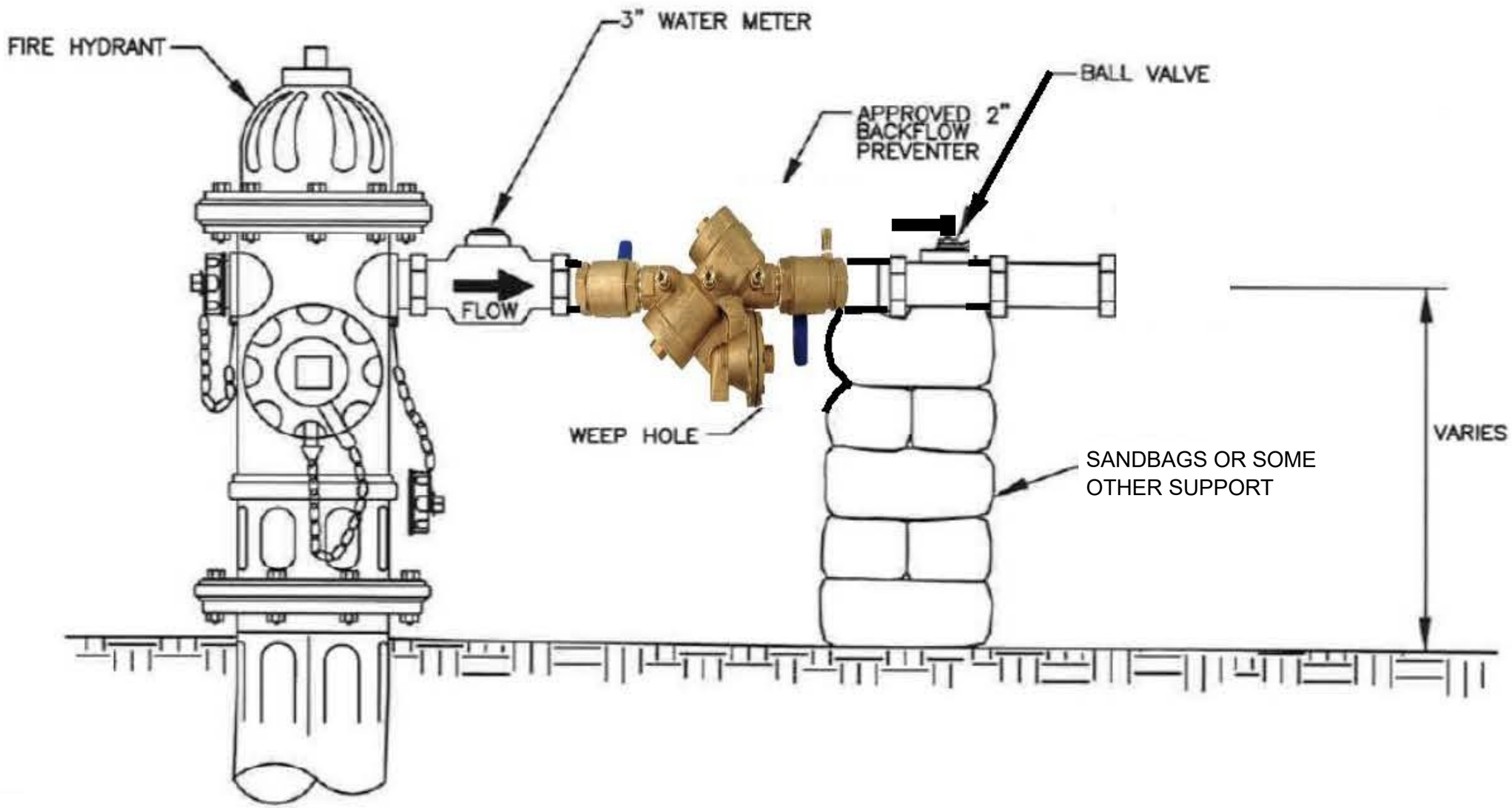

NOT TO SCALE

EST. 1955
SPRING VALLEY VILLAGE

Texas811 Know what's below. Call before you dig.

FIRE HYDRANT METER INSTALL

DETAIL: FH-4

NOT TO SCALE

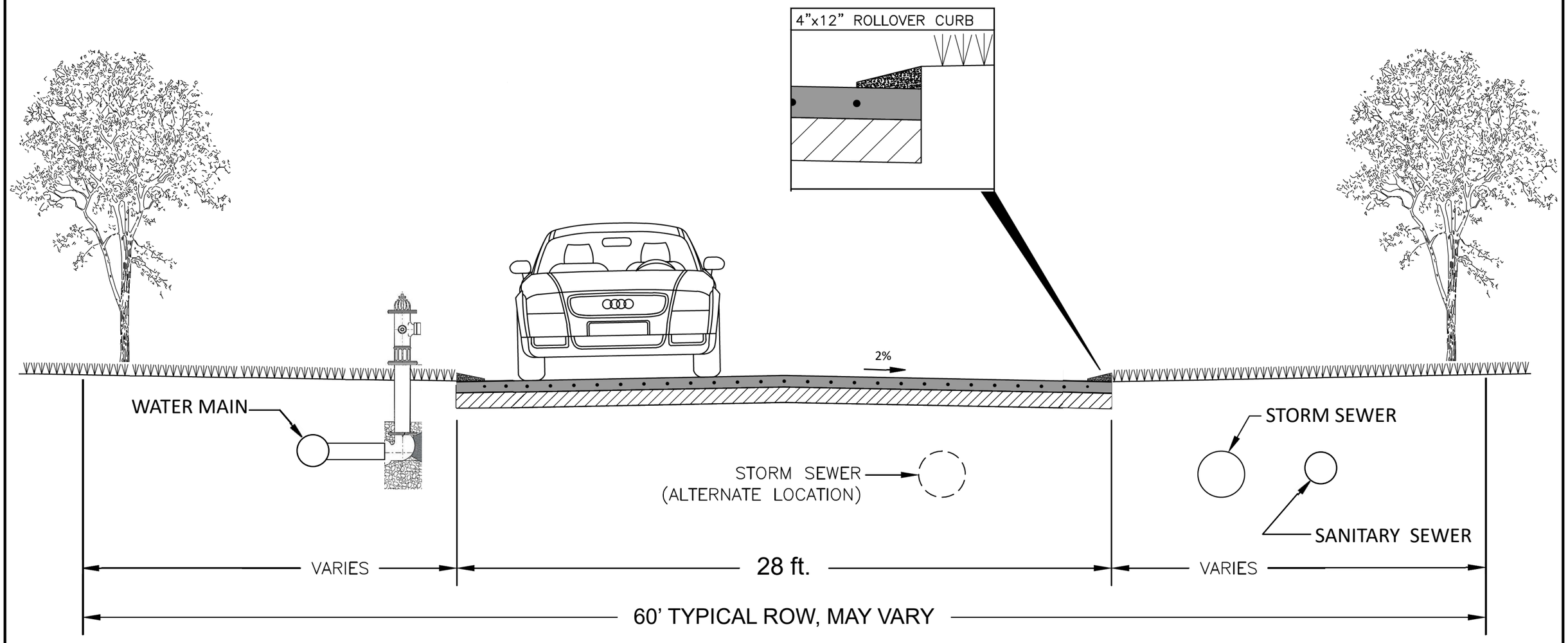

EST. 1955
SPRING VALLEY
VILLAGE

Texas811
Know what's below. Call before you dig.

TYPICAL RESIDENTIAL/LOCAL STREET SECTION

DETAIL ST-1

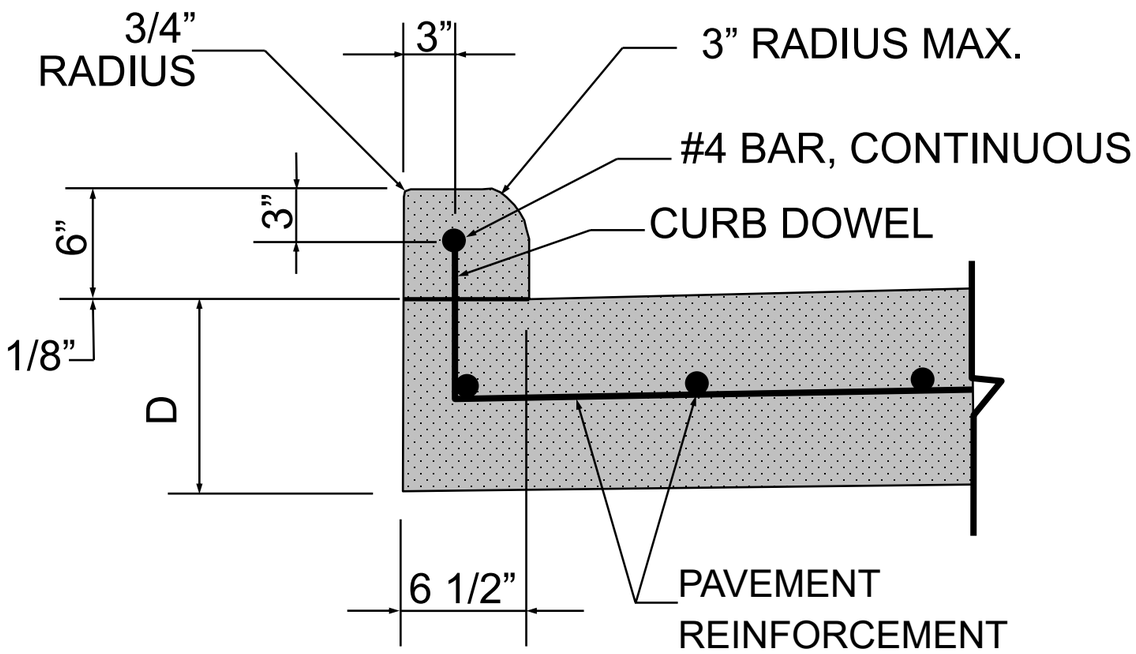

TYPICAL CONCRETE CURB REINFORCING DETAILS

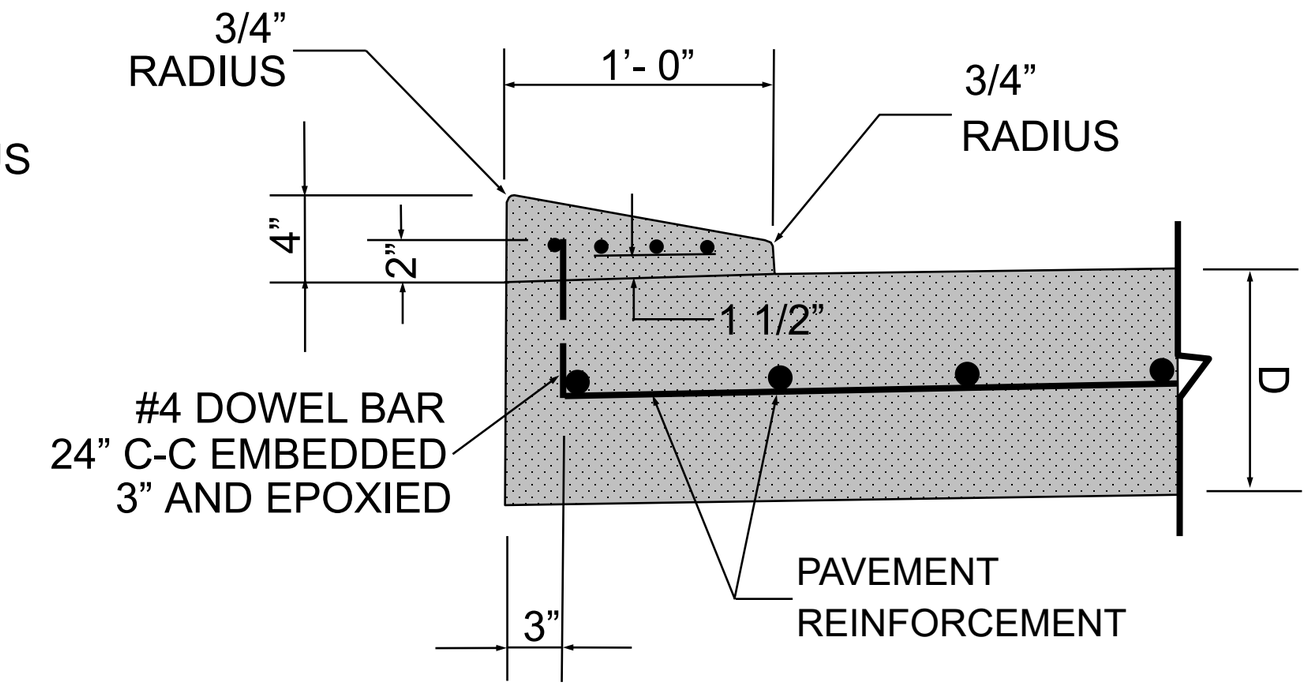

4” X 12” TRANSITION CURB (ROLL OVER)

NOTE: D = DESIGNED PAVEMENT DEPTH

NOT TO SCALE

EST. 1955 SPRING VALLEY VILLAGE

Texas 811 Know what's below. Call before you dig.

CURB DETAILS

DETAIL ST-2

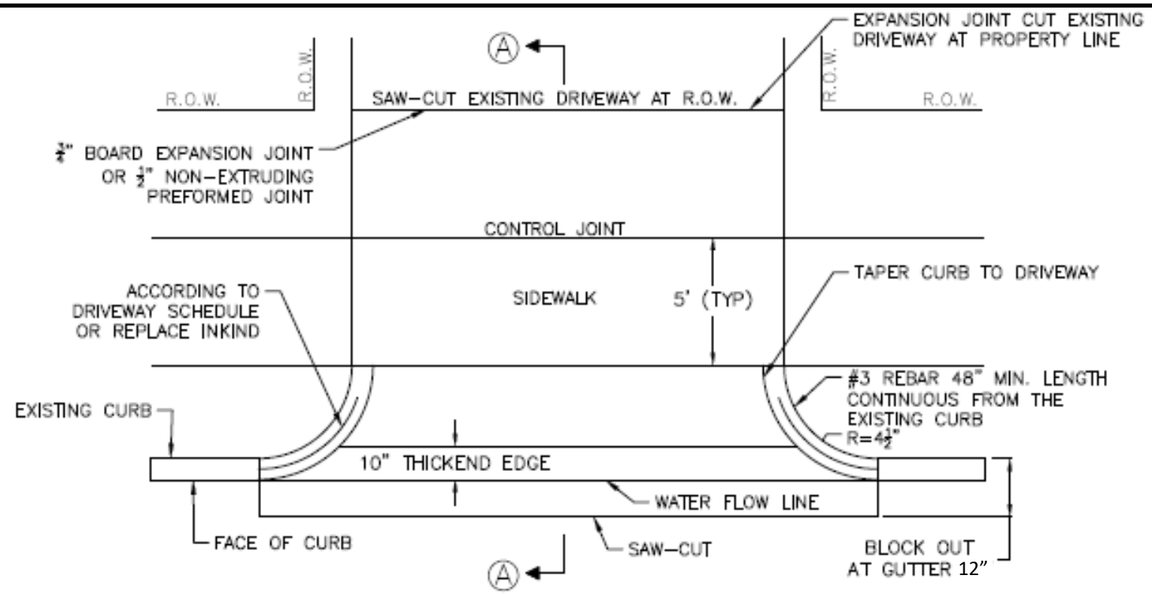

DRIVEWAY WITH SIDEWALK

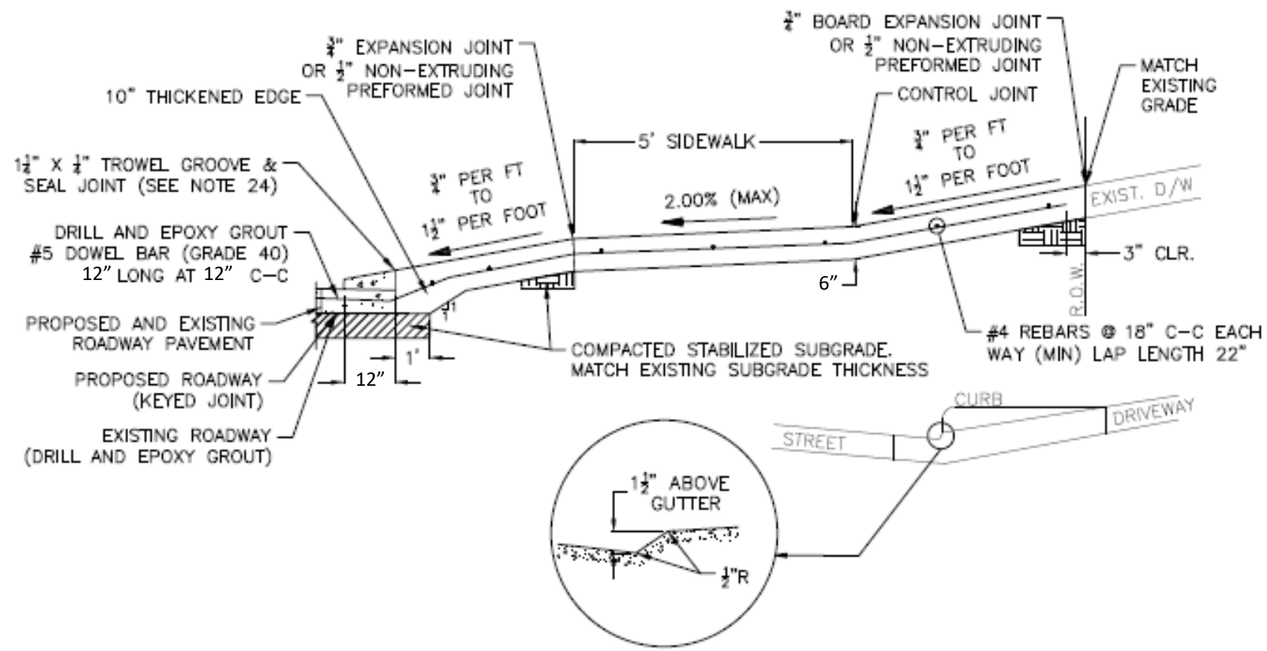

DRIVEWAY/LOCAL RESIDENTIAL STREETS (SECTION A-A)

NOTES:

1. NO CONCRETE SHALL BE PLACED UNTIL FORMS AND SUBGRADE ARE INSPECTED.
2. ALL DISTURBED SUBGRADE MUST BE TREATED TO DEPTH OF STABLIZATION REQUIREMENTS PER GEO REPORT NOTES AND SPECIFICATIONS.
3. SAW CUT OPERATIONS SHALL BEGIN AS SOON AS POSSIBLE AFTER CONCRETE PLACEMENT.
4. SAW CUT EXISTING DRIVES AT R.O.W. UNLESS UTHERWISE INSTRUCTED BY THE CITY ENGINEER OR CITY
5. SEAL ALL SAW CUT CONTROL POINTS WITH SELF-SEALING NON-SAG JOINT SEALANT MATERIAL.
6. METER BOXES OR CLEANOUTS SHALL NOT BE LOCATED WITHIN DRIVEWAYS.
7. REFER TO EXPANSION JOINT DETAIL FOR SPACING.
8. THE SIDEWALK CROSS SLOPE APPLIES TO THE DRIVEWAY INLINE WITH THE SIDEWALK CROSSING THE DRIVE. (ON THOROUGHFARES AND COLLECTORS ONLY).

EST. 1955 SPRING VALLEY VILLAGE

Texas811 Know what's below. Call before you dig.

RESIDENTIAL DRIVEWAY WITH SIDEWALK DETAIL (THOROUGHFARES AND COLLECTORS ONLY)

DETAIL ST - 3

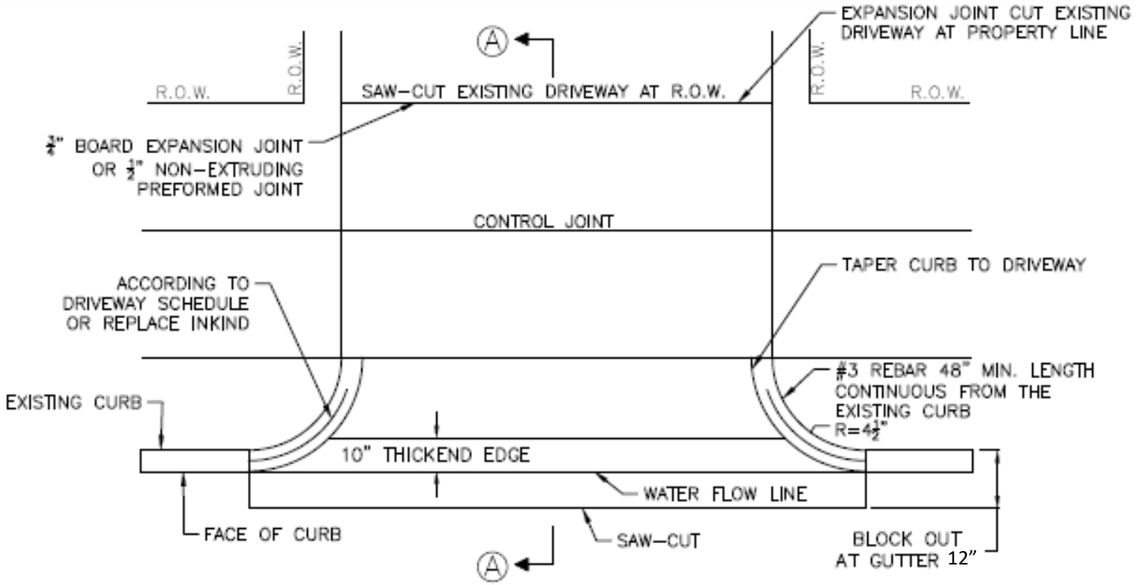

DRIVEWAY WITHOUT SIDEWALK

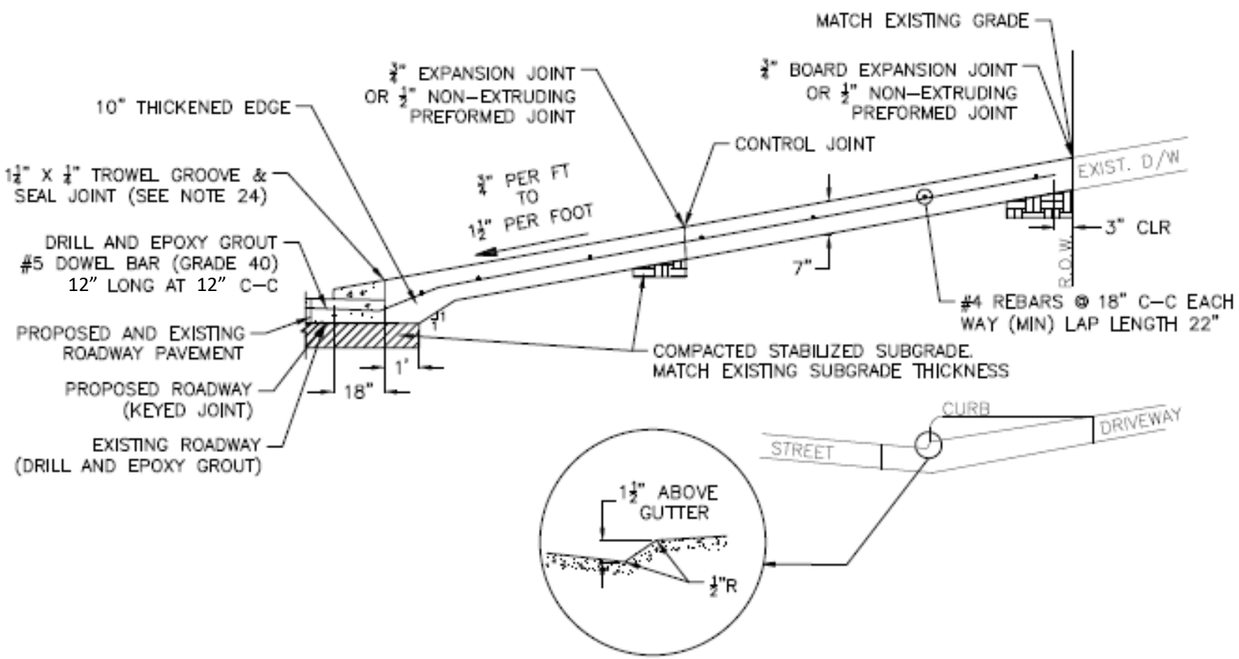

DRIVEWAY/LOCAL RESIDENTIAL STREETS (SECTION A–A)

NOTES:

1. NO CONCRETE SHALL BE PLACED UNTIL FORMS AND SUBGRADE ARE INSPECTED.
2. ALL DISTURBED SUBGRADE MUST BE TREATED TO DEPTH OF STABLIZATION REQUIREMENTS PER GEO REPORT NOTES AND SPECIFICATIONS.
3. SAW CUT OPERATIONS SHALL BEGIN AS SOON AS POSSIBLE AFTER CONCRETE PLACEMENT.
4. SAW CUT EXISTING DRIVES AT R.O.W. UNLESS UTHERWISE INSTRUCTED BY THE CITY ENGINEER OR CITY
5. SEAL ALL SAW CUT CONTROL POINTS WITH SELF-SEALING NON-SAG JOINT SEALANT MATERIAL.
6. METER BOXES OR CLEANOUTS SHALL NOT BE LOCATED WITHIN DRIVEWAYS.
7. REFER TO EXPANSION JOINT DETAIL FOR SPACING.
8. THE SIDEWALK CROSS SLOPE APPLIES TO THE DRIVEWAY INLINE WITH THE SIDEWALK CROSSING THE DRIVE. (ON THOROUGHFARES AND COLLECTORS ONLY).

EST. 1955 SPRING VALLEY VILLAGE

Texas811 Know what's below. Call before you dig.

RESIDENTIAL DRIVEWAY WITHOUT SIDEWALK DETAIL

DETAIL ST - 4

NOTES: THE CURB OUTLET MUST BE SECURED TO STREET AND CURB IN A WAY THAT DOES NOT ALLOW THE CURB DRAINAGE OUTLET TO MOVE. ALL EDGES TOUCHING THE CURB AND CEMENT PAVEMENT MUST BE SEALED WITH WATER RESISTANT SEALER MADE FOR CONCRETE.

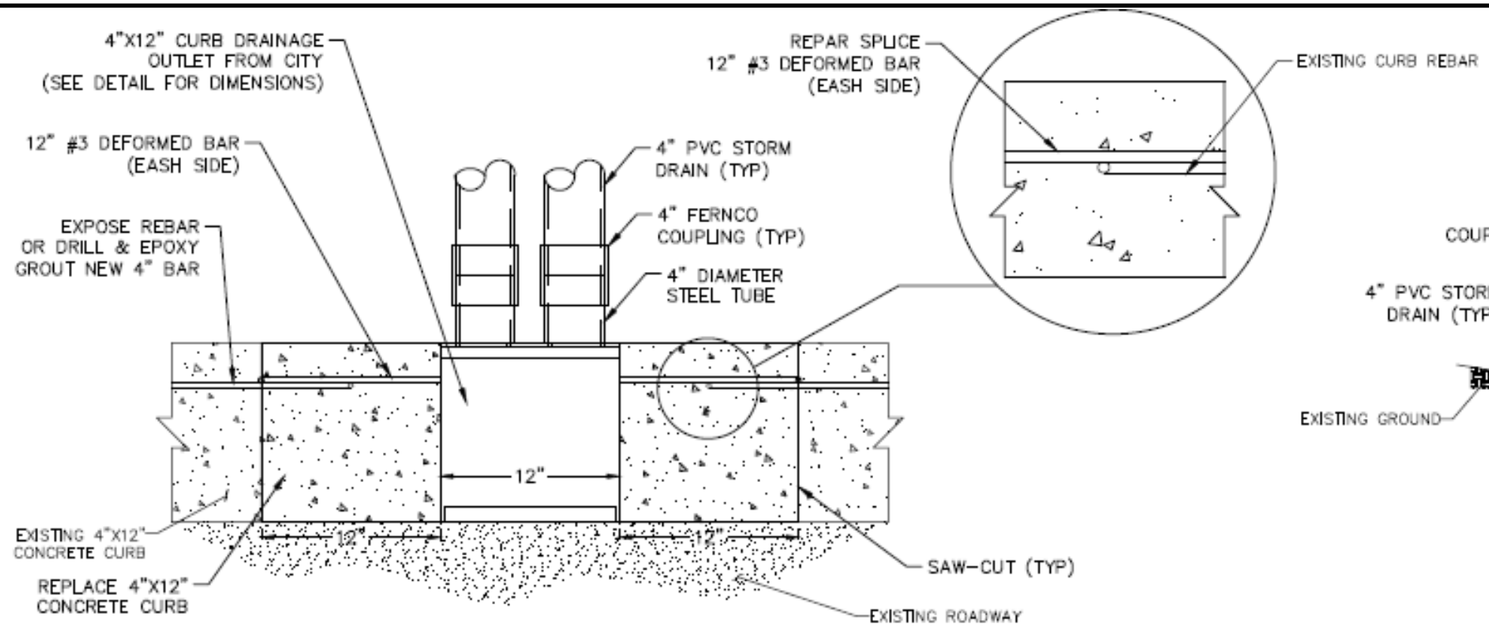

4"X12" CURB DRAINAGE OUTLET – PLAN

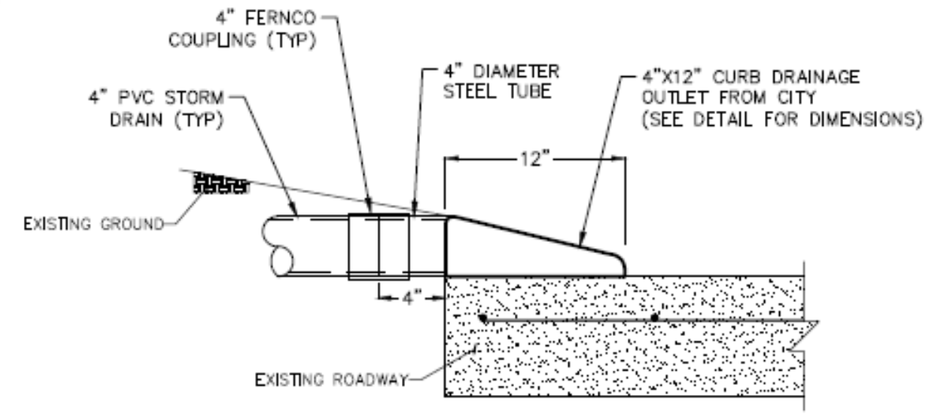

4"X12" CURB DRAINAGE OUTLET – SECTION

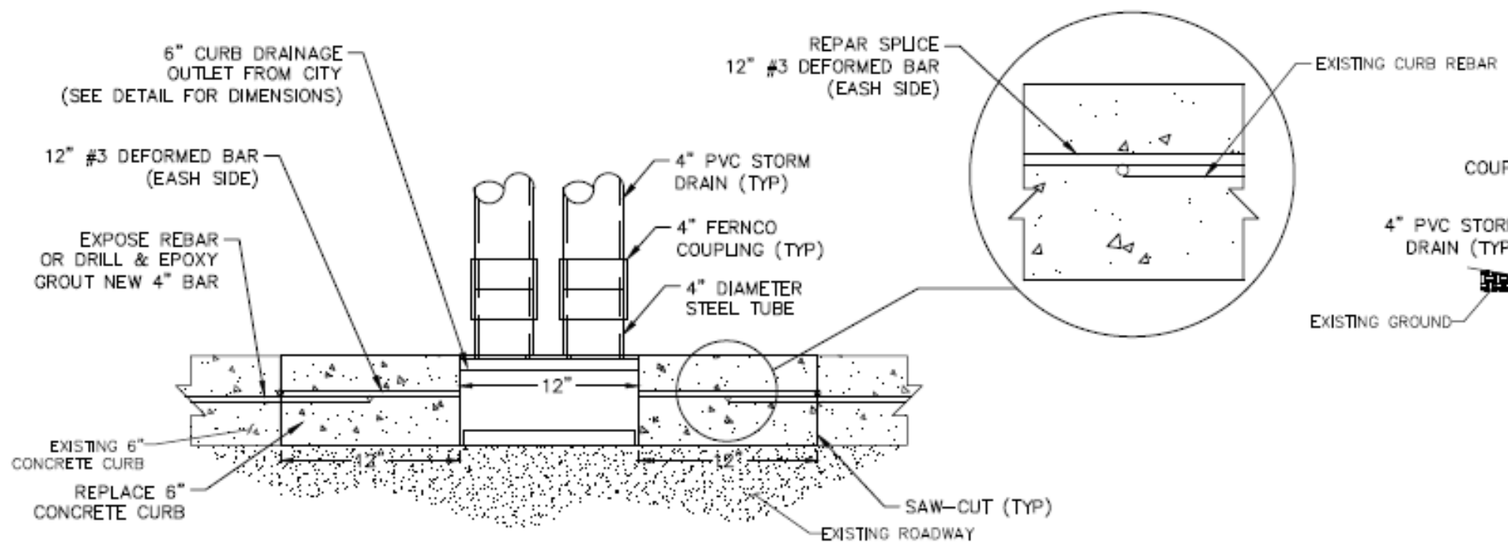

6" CURB DRAINAGE OUTLET – PLAN

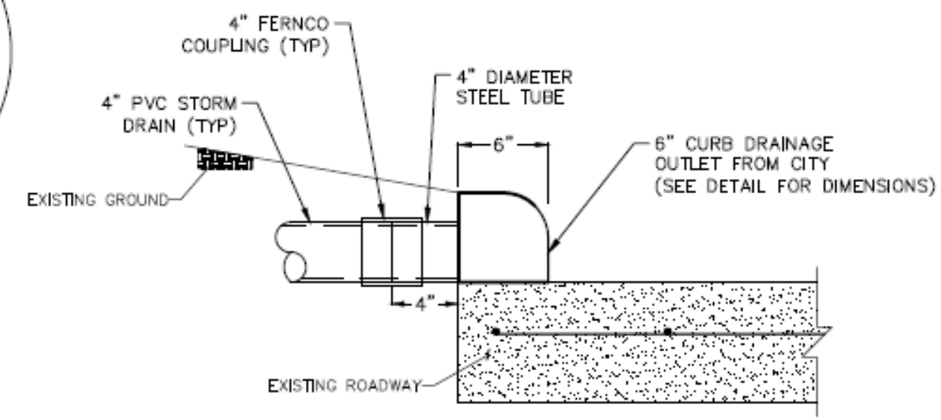

6" CURB DRAINAGE OUTLET – SECTION

EST. 1955
SPRING VALLEY VILLAGE

Texas 811 Know what's below. Call before you dig.

CURB DRAINAGE OUTLET DETAILS

DETAIL: DRAINAGE-1

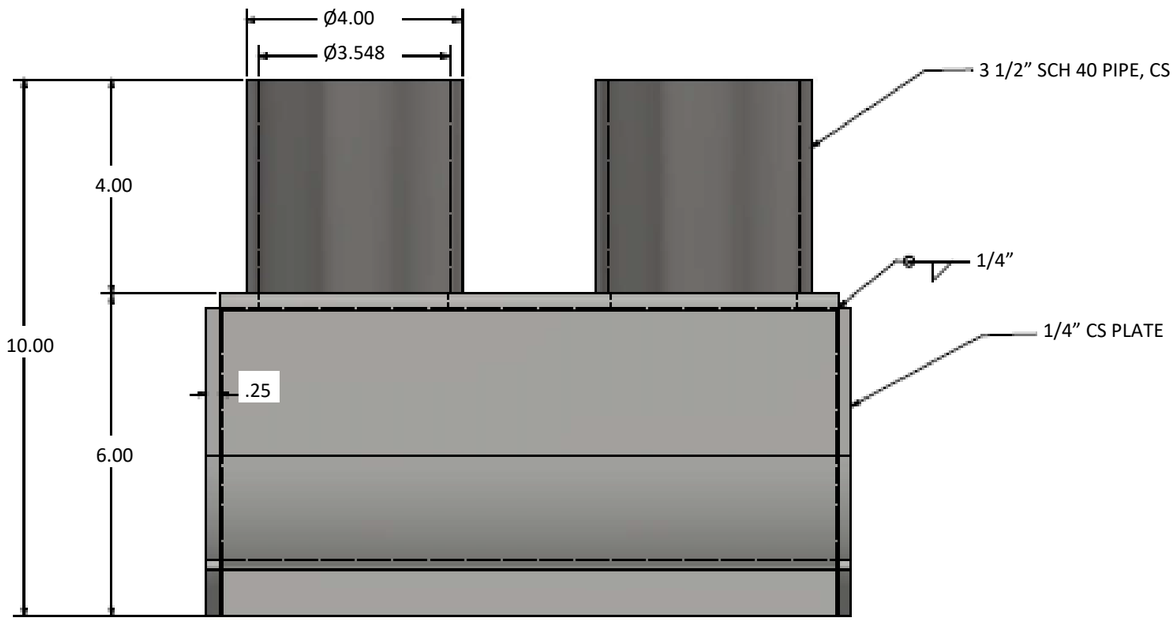

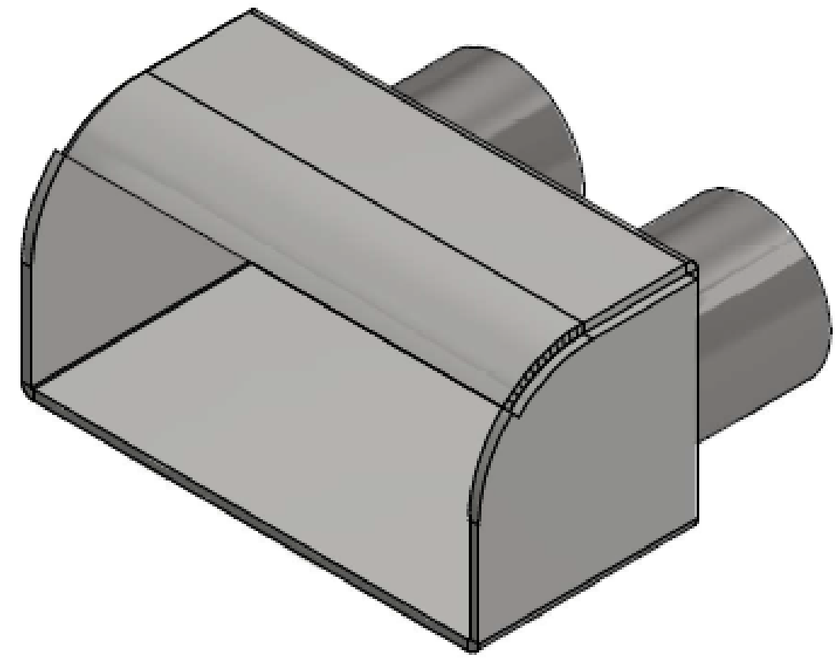

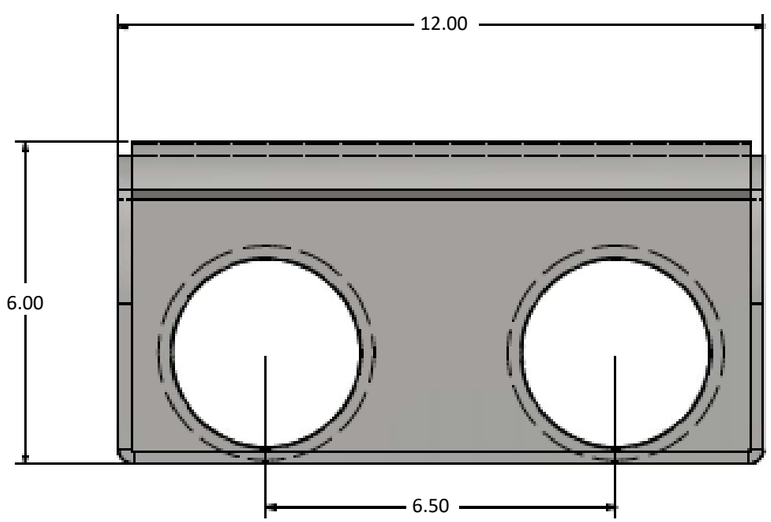

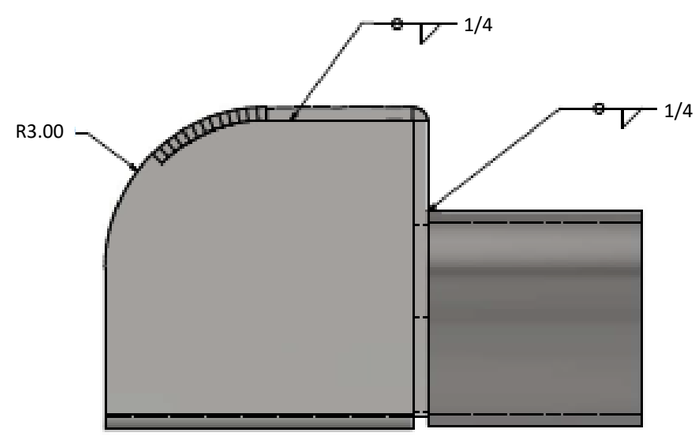

EST. 1955
SPRING VALLEY
VILLAGE

Texas811
Know what's below. Call before you dig.

6 INCH CURB INLET DETAIL

DETAIL DRAINAGE-2

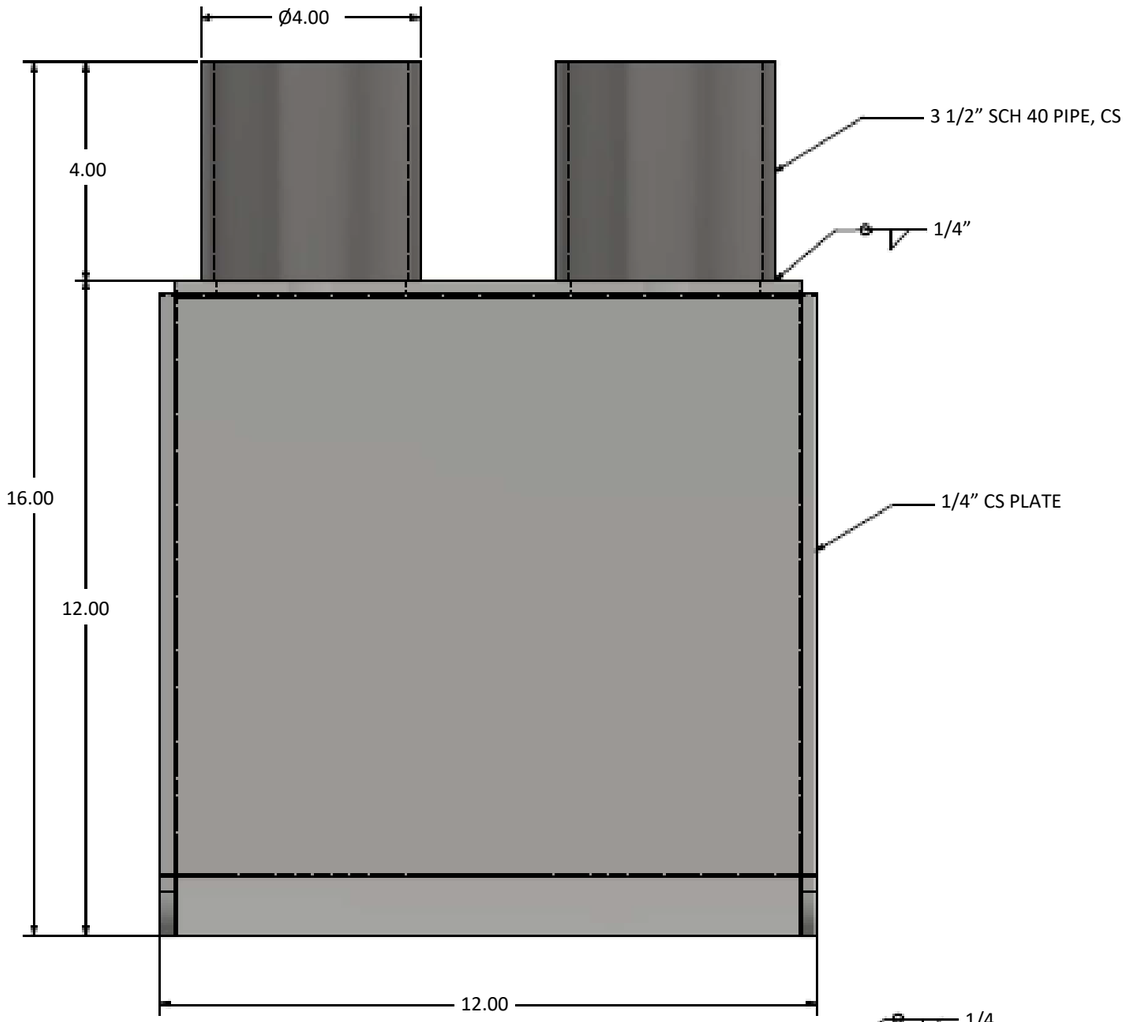

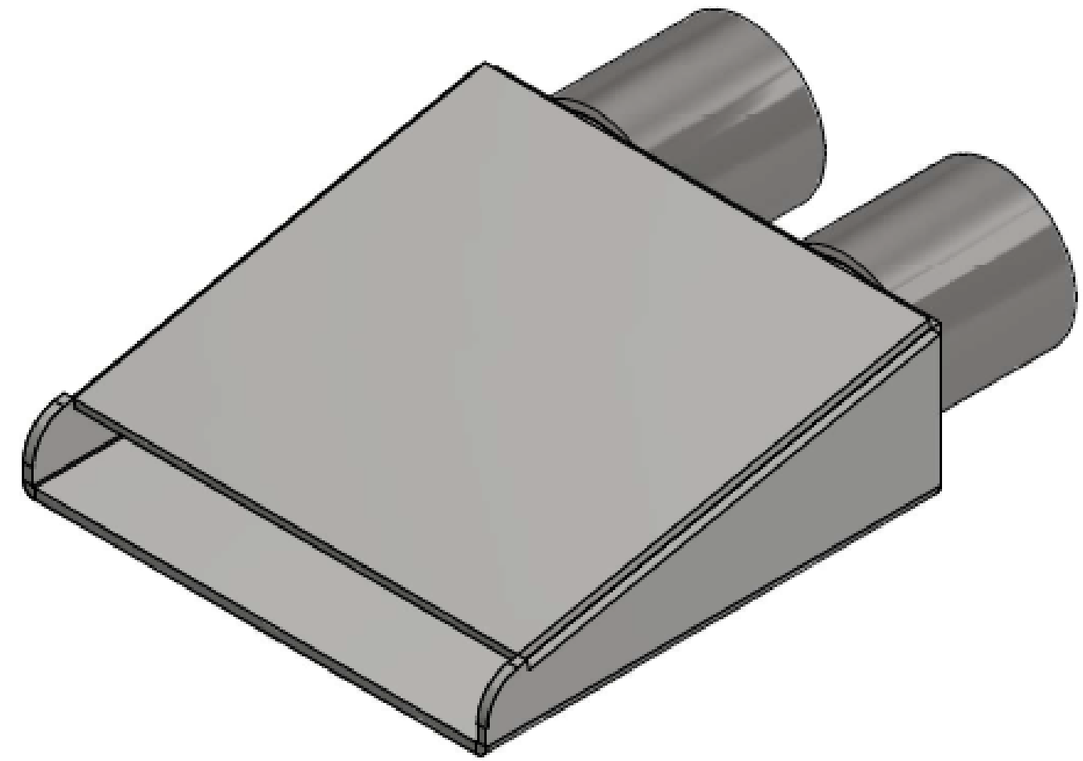

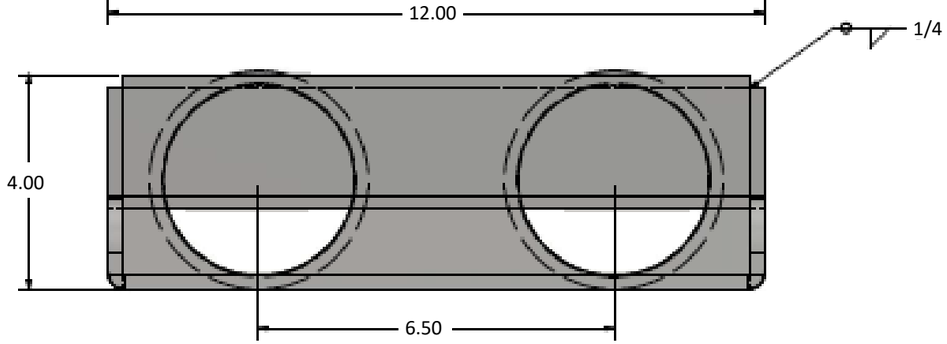

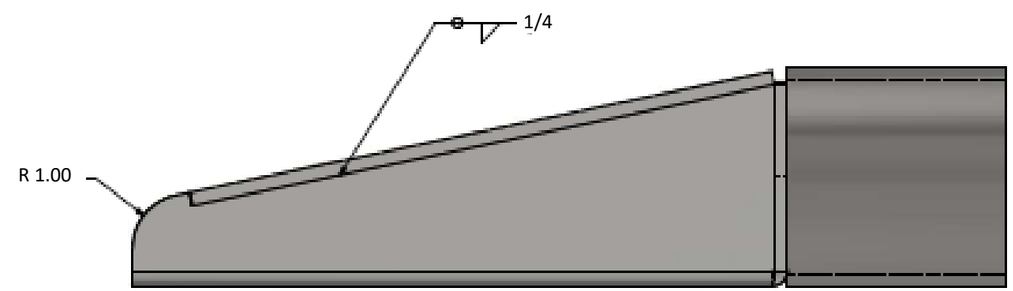

EST. 1955
SPRING VALLEY
VILLAGE

Texas811
Know what's below. Call before you dig.

4 INCH CURB INLET DETAIL

DETAIL DRAINAGE-3

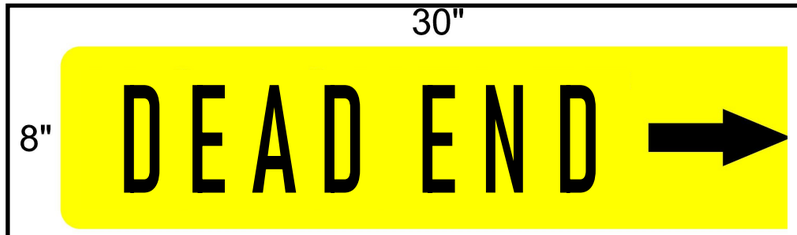

.080 Aluminum sheeted with Yellow High Intensity Prismatic Sheeting and 5" Black Non Reflective Vinyl Lettering Double

STREET SIGN EXAMPLE FOR DEAD END STREETS

Sign Connection to Post

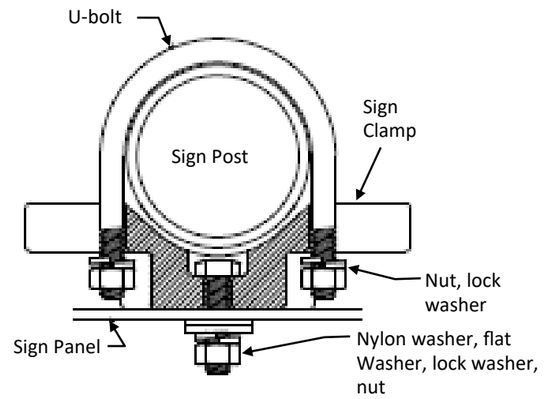

STREET SIGN MOUNTING SYSTEM

NOTE: ALL SIGN POLES AND BRACKETS ARE TO BE POWDER COATED OR PAINTED BLACK WITH QUALITY OUTDOOR PAINT. USE THE TEXAS MANUAL ON UNIFORM TRAFFIC CONTROL DEVICES (TMUTCD) FOR ALL SIGN INFORMATION USED IN THE CITY.

Material used with this system shall conform to TxDOT standards. 13 BWG Tubing (2.375" outside diameter) (TWT) 0.095" nominal wall thickness. Seamless or electric-resistance welded steel tubing.

Galvanization per ASTM 123 or ASTM A653 G210.

Wedge Anchor Steel System

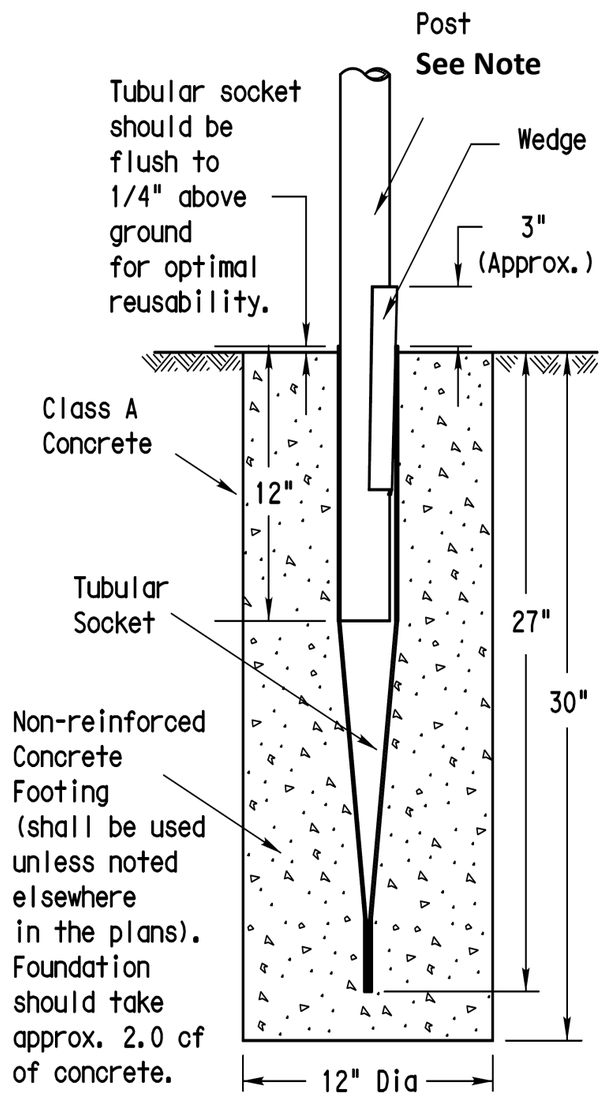

SM RD SGN ASSM TY TWT(X)WS(X)

STREET SIGN EXAMPLE

EST. 1955 SPRING VALLEY VILLAGE

Texas811 Know what's below. Call before you dig.

STREET MARKING SIGNS

DETAIL SIGNS - 1

Police Department
Staff Report

SPRING VALLEY POLICE DEPARTMENT
Calls - By Type

01\01\2021
thru 01\31\2021

Type	Description	# Of Calls
6	ACCIDENT	23
22	ALARM	30
23	AMBULANCE CALL	21
24	ANIMAL CALL	4
144	ARREST	1
43	ASSIST OUTSIDE AGENCY	17
135	BUSINESS CHECK	755
48	CITY CREW REPAIRS	2
49	CIVIL MATTER	4
53	DEBRIS IN ROADWAY	6
55	DISCHARGING FIREWORKS	1
56	DISTURBANCE	1
60	FIRE CALL	5
65	GAS LEAK	2
68	HOUSE CHECK	11
70	INFORMATION	29
71	INVESTIGATION	15
76	LOUD NOISE	6
81	OPEN DOOR	44
86	PUBLIC RELATIONS	665
88	RECOVERY STOLEN VEHICLE	3
90	REPOSSESSED VEHICLE	3
95	SMOKE IN AREA	1
96	SOLICITOR	12
97	SPECIAL ASSIGNMENT	34
99	STALLED VEHICLE	34
103	SUSPICIOUS ACTIVITY	11
104	SUSPICIOUS PERSON	13
105	SUSPICIOUS VEHICLE	25
108	TRAFFIC CONTROL	2
11	TRAFFIC STOP	991
111	VEHICLE BLOCKING ROADWAY	6
112	VEHICLE CHECK	30
42	WARRANT SERVICE	1
116	WATER LEAK	1
117	WELFARE CONCERN	4
	Total	2,813

Spring Valley Village, TX PD **Jan 1, 2021 - Jan 31, 2021**

Citation Violation Audit By Offense

Total Charges: **1587**

Description	Counts
CHANGE NAME/MAILING ADDRESS LATER THAN 30 DAYS (CDL)	1
CHANGED LANE WHEN UNSAFE	5
CHILD (4-17) NOT SECURED BY SAFETY BELT	1
CITY ORDINANCE - SOLICITING WITHOUT A PERMIT - PEDDLER	2
CRIMINAL TRESPASSING	1
D.O.C. URINATING IN A PUBLIC PLACE	1
DEFECTIVE BRAKES	1
DEFECTIVE EQUIPMENT - WHITE LIGHT TO THE REAR	6
DEFECTIVE EQUIPMENT / NO LICENSE PLATE LIGHT	68
DEFECTIVE HEAD LAMPS	121
DEFECTIVE HEAD LIGHTS	30
DEFECTIVE STOP LAMP(S)	83
DEFECTIVE STOP LIGHTS-TRAILER	6
DEFECTIVE TAIL LAMP(S)	44
DEFECTIVE TURN SIGNAL LAMP(S)	1
DISPLAY FICTITIOUS/WRONG/UNCLEAN LICENSE PLATES	19
DISPLAY SUSPENDED DRIVER LICENSE	1
DISPLAY UNCLEAN LICENSE PLATES	1
DISPLAY/ EXPIRED REGISTRATION	76
DISREGARD LANE CONTROL SIGNAL/DEVICE	1
DRIVING WHILE LICENSE INVALID UNDER PROVISIONS OF DL LAWS	17
DRIVING WITHOUT ANY LICENSE	11
DROVE WITHOUT LIGHTS (WHEN REQUIRED)	42
DROVE WRONG WAY ON ONE-WAY ROADWAY	1
EXPIRED DRIVERS LICENSE	24
FAIL TO CONTROL SPEED	3
FAIL TO DISPLAY DRIVERS LICENSE	5
FAIL TO MAINTAIN FINANCIAL RESP. 2ND OFFENSE	2

Spring Valley Village, TX PD **Jan 1, 2021 - Jan 31, 2021**

Citation Violation Audit By Offense

Total Charges: **1587**

Description	Counts
FAIL TO MAINTAIN FINANCIAL RESPONIBILITY	125
FAIL TO MAINTAIN FINANCIAL RESPONSIBILITY	55
FAIL TO OBEY TRAFFIC CONTROL DEVICE-MARKINGS	2
FAIL TO OBEY TRAFFIC CONTROL SIGN-LEFT TURN YIELD	1
FAIL TO REPORT CHANGE OF ADDRESS	8
FAIL TO YIELD ROW TO VEHICLE IN INTERSECTION	1
FAILED TO DIM HEADLIGHTS - FOLLOWING	32
FAILED TO DIM HEADLIGHTS - MEETING	90
FAILED TO DRIVE IN A SINGLE LANE	2
FAILED TO SIGNAL INTENT TO TURN	2
FAILED TO SIGNAL TURN	7
FAILED TO SIGNAL TURN / LANE CHANGE	5
FAILED TO STOP AT DESIGNATED POINT (STOP SIGN)	4
FAILED TO STOP AT PROPER PLACE (TRAFFIC LIGHT)	2
FAILED TO STOP FOR SCHOOL BUS (OR REMAIN STOPPED)	7
FAILED TO YIELD AT YIELD INTERSECTION	1
IMPEDING TRAFFIC	1
LICENSE PLATE - NO TRAILER PLATE	2
LICENSE PLATE OBSCURED	8
LITTERING	1
NO DRIVERS LICENSE	183
NO FRONT LICENSE PLATE	37
NO SEAT BELT - DRIVER	5
OPEN CONTAINER	2
OPERATE MOTOR VEHICLE WITH FICTITIOUS LICENSE PLATES	1
OPERATE MOTOR VEHICLE WITHOUT LICENSE PLATES OR WITH ONE LICENSE PLATE	4
OPERATE UNREGISTERED MOTOR VEHICLE	1
PARK OR STAND WITHIN 20 FT OF CROSSWALK AT INTERSECTION	1

Spring Valley Village, TX PD **Jan 1, 2021 - Jan 31, 2021**

Citation Violation Audit By Offense

Total Charges: **1587**

Description	Counts
PARKED FACING TRAFFIC	6
PASSING AUTHORIZED EMERGENCY VEHICLE	9
PASSING/DISREGARD NO PASSING ZONE	2
RAN RED LIGHT	65
RAN RED LIGHT SERVICE ROAD	1
RAN STOP SIGN	30
SPEEDING - REDUCED SPEED	2
SPEEDING (NU)	12
SPEEDING >10% ABOVE POSTED LIMIT	222
SPEEDING IN SCHOOL ZONE	62
THEFT	1
TURNED RIGHT FROM WRONG LANE	2
TURNED RIGHT TOO WIDE	3
UNRESTRAINED CHILD YOUNGER THAN 8 OR UNDER 4FT 9IN	1
UNSAFE U-TURN	1
VIOLATE DL RESTRICTION B	4

MONTHLY K-9 REPORT

FOR THE MONTH OF: Jan-21

MOYER, NABORS
FRITZ, ODIN

	TOTALS
K-9 CALLS FOR SERVICE	
SPRING VALLEY VILLAGE	146
OUTSIDE AGENCY	0
K-9 APPREHENSIONS	
	0
NARCOTICS CASES	
	0
PUBLIC RELATIONS EVENT	
	4

Spring Valley Village City Council
Agenda Item Data Sheet

MEETING DATE:	February 23, 2021
TOPIC:	**Ordinance No. 2021-XX** **AN ORDINANCE OF THE CITY OF SPRING VALLEY VILLAGE, REVISING ARTICLE 3.1500, DRAINAGE CRITERIA, OF CHAPTER 3, BUILDING AND CONSTRUCTION, OF THE CODE OF ORDINANCES OF THE CITY OF SPRING VALLEY VILLAGE, TEXAS BY DELETING EXHIBIT 1, DETAIL FOR CURB DRAIN CONNECTIONS, AND ADOPTING A NEW EXHIBIT 1, DETAILS FOR CURB DRAIN CONNECTIONS; PROVIDING FOR THE INCORPORATION OF PREAMBLE; PROVIDING A PENALTY IN AN AMOUNT NOT TO EXCEED $2,000.00 FOR EACH VIOLATION OF THIS ORDINANCE WITH EACH DAY OF VIOLATION CONSTITUTING A SEPARATE VIOLATION; AND PROVIDING A REPEALER CLAUSE, A SEVERABILITY CLAUSE, A SAVINGS CLAUSE, AND AN EFFECTIVE DATE.**
BACKGROUND:	During the November 17, 2020, Workshop Meeting regarding the proposed Public Infrastructure Design Manual, it was the direction of the City Council to use new designs as presented for curb drain connections for public infrastructure projects, and these designs would also be applicable for residential construction projects. The proposed Ordinance revises Article 3.1500, Drainage Criteria, of Chapter 3, Building and Construction, of the Code of Ordinances to delete the previous "Exhibit 1 - Detail for Curb Drain Connections" and adopt a new "Exhibit 1 – Detail for Curb Drain Connections" consistent with the Council's direction on November 17, 2020.
RECOMMENDATION:	Staff recommends approval of the Ordinance.
ATTACHMENTS:	• Ordinance No. 2021-XX
FUNDING ISSUES:	☒ Not applicable – no dollars are being spent or received. ☐ Full amount already budgeted in Acct/Project# _____ ☐ Not budgeted, if approved, the following will be included in the next Budget Amendment: ☐ $_____ from Acct/Project# _____ will be transferred to Acct/Project# _____ ☐ $_____ from unassigned fund balance will be used and added to Acct/Project# _____ ☐ $_____ will be added to Revenue Acct# __-____ and $_____ added to Expenditure Acct/Project# _____
FINANCE VERIFICATION OF FUNDING:	
SUBMITTING STAFF MEMBER: Zachary Meadows, Director of Community Development	**CITY ADMINISTRATOR APPROVAL:**

ORDINANCE NUMBER 2021-XX

AN ORDINANCE OF THE CITY OF SPRING VALLEY VILLAGE, REVISING ARTICLE 3.1500, DRAINAGE CRITERIA, OF CHAPTER 3, BUILDING AND CONSTRUCTION, OF THE CODE OF ORDINANCES OF THE CITY OF SPRING VALLEY VILLAGE, TEXAS BY DELETING EXHIBIT 1, DETAIL FOR CURB DRAIN CONNECTIONS, AND ADOPTING A NEW EXHIBIT 1, DETAILS FOR CURB DRAIN CONNECTIONS; PROVIDING FOR THE INCORPORATION OF PREAMBLE; PROVIDING A PENALTY IN AN AMOUNT NOT TO EXCEED $2,000.00 FOR EACH VIOLATION OF THIS ORDINANCE WITH EACH DAY OF VIOLATION CONSTITUTING A SEPARATE VIOLATION; AND PROVIDING A REPEALER CLAUSE, A SEVERABILITY CLAUSE, A SAVINGS CLAUSE, AND AN EFFECTIVE DATE.

WHEREAS, the City of Spring Valley Village, Texas, is a Type A General Law city having authority to utilize police power regulations for the health, safety and welfare of the citizens of the City; and

WHEREAS, by Ordinance Number 2017-29, duly passed and approved on December 12, 2017, the City Council adopted engineering standards and practices governing the design and construction of drainage facilities in order to meet the needs created by new development and redevelopment in the City, and such Ordinance was codified as Section 3.1500, Drainage Criteria, of Chapter 3, Building Construction, of the Code of Ordinances of the City; and

WHEREAS, since the adoption of the drainage criteria regulations and based on discussions regarding the use of curb connections, the City Council has determined that the existing details for curb connections should be revised to address and resolve issues that exist within the City; and

WHEREAS, the City Council of the City of Spring Valley Village hereby finds that Article 3.1500, Drainage Criteria, of Chapter 3, Building and Construction, of the Code of Ordinances should be revised by deleting Exhibit 1, Detail for Curb Drain Connections, and adopting a new Exhibit 1, Detail for Curb Drain Connections, to establish revised curb connection standards for use in the preparation of drainage plans within the City.

NOW, THEREFORE, BE IT ORDAINED BY THE CITY COUNCIL OF THE CITY OF SPRING VALLEY VILLAGE, TEXAS, THAT:

Section 1. The above and foregoing premises are true and correct and are incorporated herein and made a part hereof for all purposes.

Section 2. Article 3.1500, Drainage Criteria, of Chapter 3, Building and Construction, of the Code of Ordinances of the City of Spring Valley Village, Texas is hereby revised by deleting Exhibit 1, Detail For Curb Drain Connections, and adopting a new Exhibit 1, Details For Curb Drain Connections, attached hereto as Exhibit "A" and incorporated herein by reference.

Section 3. This Ordinance shall be cumulative of all other Ordinances and shall not repeal any of the provisions of said Ordinances except those instances where there are direct conflicts with the provisions of this Ordinance. Ordinances or parts thereof in force at the time this Ordinance shall take effect and that are inconsistent with this Ordinance are hereby repealed to the extent that they are inconsistent with this Ordinance. Provided, however, that any complaint, action, claim or lawsuit that has been initiated or has arisen under or pursuant to any of the Ordinances or sections thereof that have been specifically repealed on the date of adoption of this Ordinance shall continue to be governed by the provisions of such Ordinance or section thereof and for that purpose the Ordinance or section thereof shall remain in full force and effect.

Section 4. If any section, article, paragraph, sentence, clause, phrase or word in this Ordinance, or application thereof to any person or circumstance, is held invalid or unconstitutional by a court of competent jurisdiction, such holding shall not affect the validity of the remaining portions of the Ordinance, and the City Council hereby declares it would have passed such remaining portions of the Ordinance despite such invalidity, which remaining portions shall remain in full force and effect.

Section 5. All rights and remedies of the City of Spring Valley Village are expressly saved as to any and all violations of the provisions of any Ordinances affecting and which have accrued at the time of the effective date of this Ordinance; and, as to such accrued violations and all pending litigation, both civil and criminal, whether pending in court or not, under such Ordinances, same shall not be affected by this Ordinance but may be prosecuted until final disposition by the courts.

Section 6.

6.01 Any person who intentionally, knowingly, recklessly or with criminal negligence violates any of the provisions of this Ordinance shall be deemed guilty of a Class C misdemeanor and, upon conviction, shall be fined in a sum not to exceed Two Thousand Dollars ($2000) for each offense, and a separate offense shall be deemed committed upon each day during or on which a violation occurs or continues.

6.02 If the City Council of the City of Spring Valley Village determines that a violation of this Ordinance creates a threat to the public safety, the City of Spring Valley Village may bring suit in district court to enjoin the person, firm, partnership, corporation, or association from engaging in the prohibited activity. The City of Spring Valley Village is not required to give bond as a condition to the issuance of injunctive relief.

Section 7. This Ordinance shall be in full force and effect from and after its date of passage, in accordance with the law.

DULY PASSED AND APPROVED on this the _____ day of _____, 2021.

_____
Marcus Vajdos, Mayor
City of Spring Valley Village, Texas

ATTEST:

_____
Roxanne Benitez, City Secretary
City of Spring Valley Village, Texas

EXHIBIT “A”

TO

ORDINANCE NUMBER 2021-XX

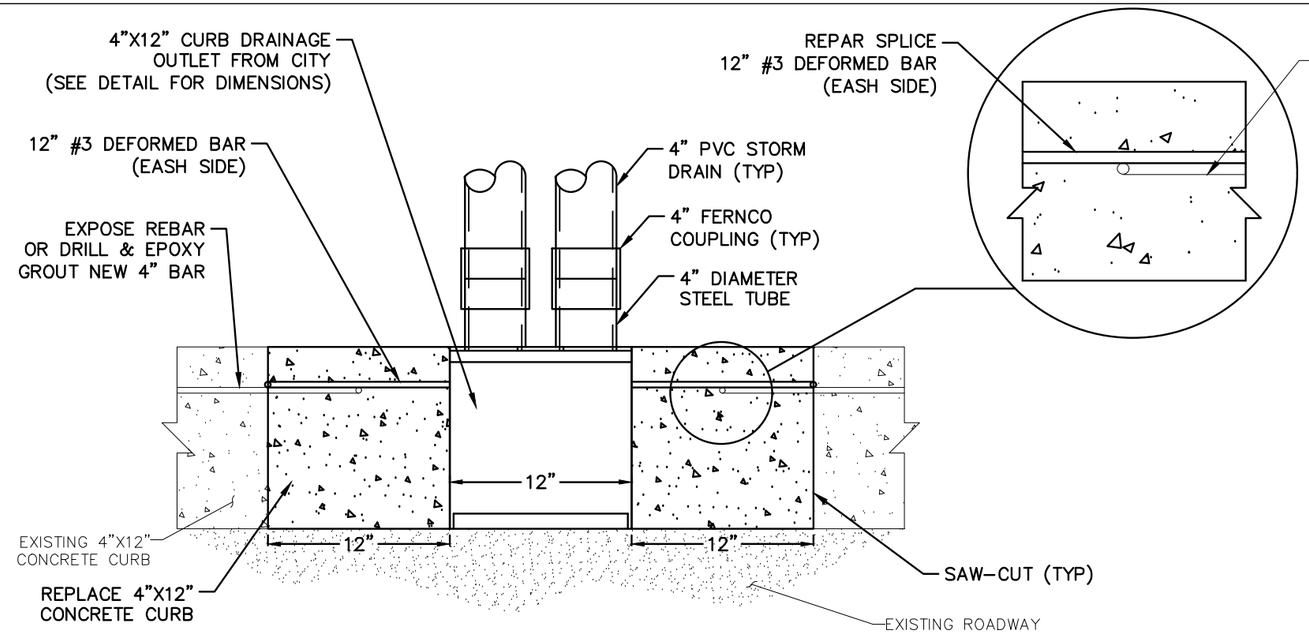

4"X12" CURB DRAINAGE OUTLET – PLAN

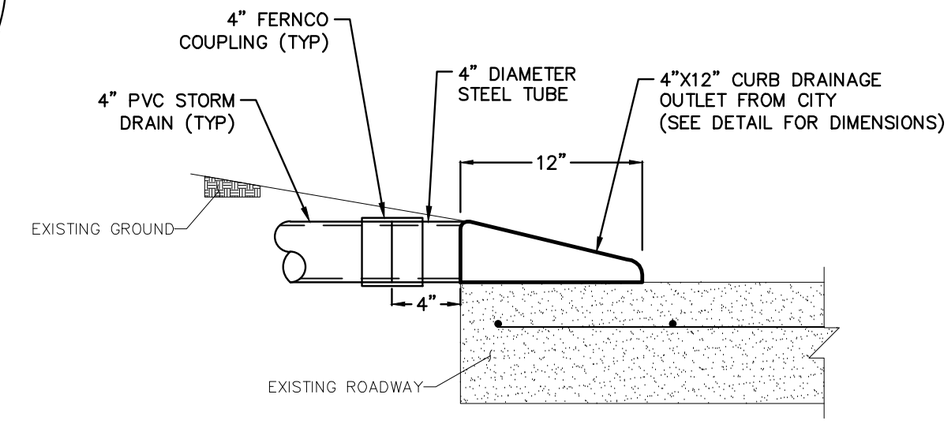

4"X12" CURB DRAINAGE OUTLET – SECTION

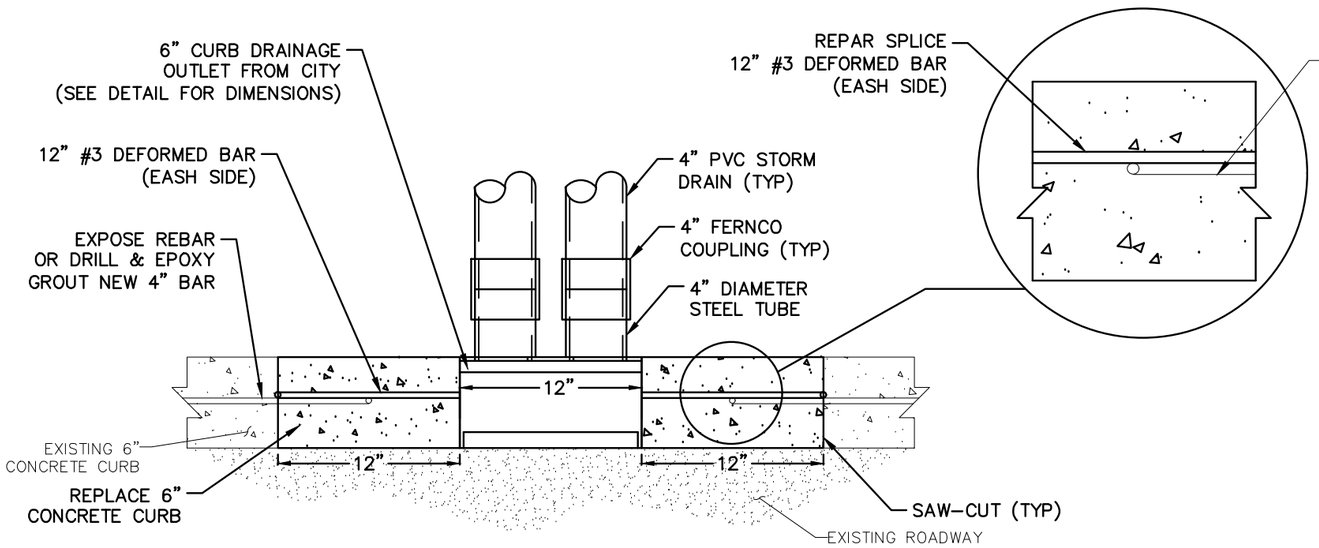

6" CURB DRAINAGE OUTLET – PLAN

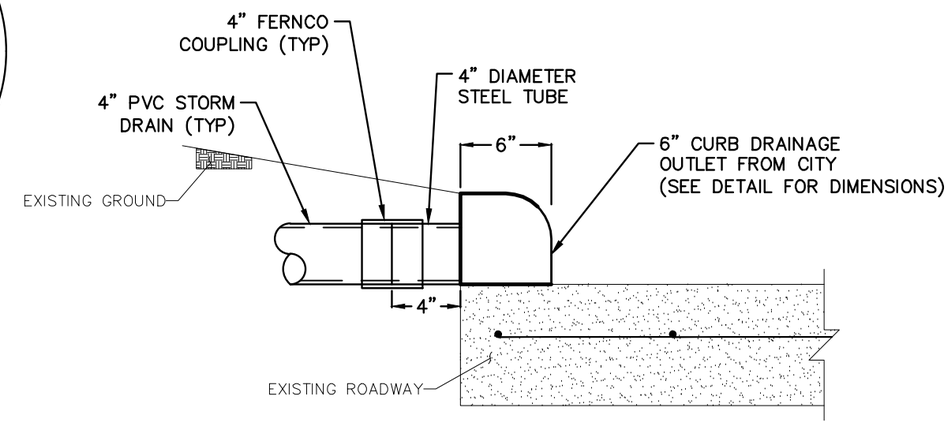

6" CURB DRAINAGE OUTLET – SECTION

		DETAIL FOR CURB DRAIN CONNECTIONS	DETAIL:
		APPROVED BY: / DATE:	REVISED

MEETING DATE: February 23, 2021

TOPIC: **Ordinance No. 2021-XX**

AN ORDINANCE AMENDING THE CODE OF ORDINANCES OF THE CITY OF SPRING VALLEY VILLAGE, TEXAS, BY AMENDING SECTION 3.001 RESIDENTIAL BUILDING AND CONSTRUCTION FEE SCHEDULE OF APPENDIX "A", SCHEDULE OF FEES, FOR THE CITY OF SPRING VALLEY VILLAGE BY ESTABLISHING A NEW FEE FOR CURB DRAIN CONNECTION DEVICES; AND PROVIDING A REPEALER CLAUSE, A SEVERABILITY CLAUSE, AND AN EFFECTIVE DATE.

BACKGROUND: As discussed in the previous agenda item regarding the amendment of the Drainage Criteria Manual, the Master Fee Schedule needs to be amended to reflect the costs associated with the new curb connection devices.

In the past, contractors were required to purchase the devices from outside sources and at possible higher costs with longer lead times to receive the connections because each purchase was special order. However, the City is planning to purchase a four each of the 4-inch and 6-inch connection devices to have in stock, and contractors will be able to purchase the connection from the City directly adding a significant convenience to the contractor (and new resident) with just a straight pass-through of the cost.

The City has received a quote from Crow Corporation for the purchase of four 4-inch connections at $300.00/each and four 6-inch connections at $325.00/each, for a total of $2,500.00. The initial purchase of the eight connection devices is to do a trial run and see how many the City will need to keep in stock based on the amount of work being completed around the City. The cost of the curb connection would be assessed at the time of submission of an application to the City for drainage review associated with various residential projects.

RECOMMENDATION: Staff recommends approval of the Ordinance.

ATTACHMENTS:
- Ordinance No. 2021-XX

FUNDING ISSUES:
☒ Not applicable – no dollars are being spent or received.
☐ Full amount already budgeted in Acct/Project# _____
☐ Not budgeted, if approved, the following will be included in the next Budget Amendment:
☐ $_____ from Acct/Project# _____ will be transferred to Acct/Project# _____

☐ $_____ from unassigned fund balance will be used and added to Acct/Project# _____ ☐ $_____ will be added to Revenue Acct# __-____ and $_____ added to Expenditure Acct/Project# _____	
FINANCE VERIFICATION OF FUNDING:	
SUBMITTING STAFF MEMBER: Michelle Yi, City Treasurer	**CITY ADMINISTRATOR APPROVAL:**

ORDINANCE NO. 2021-XX

AN ORDINANCE AMENDING THE CODE OF ORDINANCES OF THE CITY OF SPRING VALLEY VILLAGE, TEXAS, BY AMENDING SECTION 3.001 RESIDENTIAL BUILDING AND CONSTRUCTION FEE SCHEDULE OF APPENDIX "A", SCHEDULE OF FEES, FOR THE CITY OF SPRING VALLEY VILLAGE BY ESTABLISHING A NEW FEE FOR CURB DRAIN CONNECTION DEVICES; AND PROVIDING A REPEALER CLAUSE, A SEVERABILITY CLAUSE, AND AN EFFECTIVE DATE.

* * * * * * * * * * * *

WHEREAS, on December 12, 2017, by Ordinance Number 2017-29, the City Council of the City of Spring Valley Village, Texas adopted drainage criteria applicable within the City, and such Ordinance was codified as Article 3, 1500, Drainage Criteria, of Chapter 3, Building and Construction, of the Code of Ordinances of the City; and

WHEREAS, Section 3.1504, Administration, established the ability to assess necessary fees associated with the installation of drainage per submitted and approved drainage plans; and

WHEREAS, the City Council finds that it is appropriate to recoup the costs associated with the purchase of Curb Connection Devices that have been adopted in the Drainage Criteria for use in residential projects; and

WHEREAS, the fees applicable to construction and development in the City of Spring Valley Village are found in in Section 3.001, Building and Construction Fees, of Appendix "A", Fee Schedule, of the Code of Ordinances of the City of Spring Valley Village, Texas

WHEREAS, the City Council hereby finds that Section 3.001, Building and Construction Fees, of Appendix "A", Fee Schedule, of the Code of Ordinances of the City of Spring Valley Village, Texas should be amended to include a new fee for Curb Drain Connection Devices.

NOW, THEREFORE, BE IT ORDAINED BY THE CITY COUNCIL OF THE CITY OF SPRING VALLEY VILLAGE, TEXAS, THAT:

Section 1. The facts and matters set forth in the preamble to this Ordinance are hereby found to be true and correct.

Section 2. Section 3.001, Building and Construction Fees, of Appendix "A", Fee Schedule, of the Code of Ordinances of the City of Spring Valley Village, is hereby amended to include a new fee for Curb Drain Connection Devices, to provide as follows:

3.001 Residential Building and Construction Fee Schedule

(12) Curb Drain Connection Device (4-inch or 6-inch) ….. $ (Actual Cost)

Section 3. All other ordinances or parts of ordinances inconsistent or in conflict herewith are, to the extent of such inconsistency or conflict, hereby repealed.

Section 4. In the event any clause phrase, provision, sentence, or part of this Ordinance, or the "Schedule of Fees for the City of Spring Valley Village, Texas" adopted hereby, or the application of same to any person or circumstance shall for any reason be adjudged invalid or held unconstitutional by a court of competent jurisdiction, it shall not affect, impair, or invalidate this ordinance or said schedule of fees as a whole or any part or provision hereof other than the part declared to be invalid or unconstitutional; and the City Council of the City of Spring Valley Village, Texas, declares that it would have passed each and every part of the same notwithstanding the omission of any such part thus declared to be invalid or unconstitutional, whether there be one or more parts.

Section 5. The rates established by this Ordinance shall be charged to each applicant whose application has been filed with the City of Spring Valley Village upon the effective date of this Ordinance.

Section 6. This Ordinance shall become effective upon its adoption by the City Council, in accordance with law.

DULY PASSED, APPROVED, AND ADOPTED this 23rd day of February, 2021.

_____
Marcus Vajdos, Mayor
City of Spring Valley Village, Texas

ATTEST:

_____
Roxanne Benitez, City Secretary
City of Spring Valley Village, Texas

Spring Valley Village City Council
Agenda Item Data Sheet

MEETING DATE: February 23, 2021

TOPIC: **RESOLUTION NUMBER 21-XX**

A RESOLUTION OF THE CITY COUNCIL OF THE CITY OF SPRING VALLEY VILLAGE, TEXAS, ADOPTING AN ELECTRONIC SIGNATURE POLICY; AND PROVIDING AN EFFECTIVE DATE.

BACKGROUND: As a result of the COVID-19 pandemic, the City has conducted fewer face-to-face meetings and transactions, and City Staff have worked remotely on many occasions. The use of electronic signatures has become imperative for the City to continue to transact business quickly and effectively in the post-COVID environment. Staff developed the proposed policy by researching best practices, reviewing other cities' social media policies, and working with our City Attorney and Police Chief to create a policy that meets the City's needs.

This Resolution would formally adopt an Electronic Signature Policy that clearly establishes a framework for utilizing electronic signatures for City documents.

RECOMMENDATION:
- Staff recommends approval of the Resolution.

ATTACHMENTS:
- Resolution Number 21-XX

FUNDING ISSUES:

☒ Not applicable – no dollars are being spent or received.
☐ Full amount already budgeted in Acct/Project# _____
☐ Not budgeted, if approved, the following will be included in the next Budget Amendment:
- ☐ $_____ from Acct/Project# _____ will be transferred to Acct/Project# _____
- ☐ $_____ from unassigned fund balance will be used and added to Acct/Project# _____
- ☐ $_____ will be added to Revenue Acct# __-____ and $_____ added to Expenditure Acct/Project# _____

FINANCE VERIFICATION OF FUNDING:

SUBMITTING STAFF MEMBER:	**CITY ADMINISTRATOR APPROVAL:**
Roxanne Benitez, City Secretary	

RESOLUTION NUMBER 21-XX

A RESOLUTION OF THE CITY COUNCIL OF THE CITY OF SPRING VALLEY VILLAGE, TEXAS, ADOPTING AN ELECTRONIC SIGNATURE POLICY; PROVIDING FOR THE INCORPORATION OF PREAMBLE; AND PROVIDING AN EFFECTIVE DATE.

WHEREAS, the City of Spring Valley Village desires to have a written policy outlining the policy and processes for Electronic Signatures, and the City does not currently have such a policy; and

WHEREAS, the City Council is of the opinion that the Electronic Signature Policy attached hereto as Exhibit "A" should be adopted.

NOW, THEREFORE, BE IT RESOLVED BY THE CITY COUNCIL OF THE CITY OF SPRING VALLEY VILLAGE, TEXAS, THAT:

Section 1. The above and foregoing premises are true and correct and are incorporated herein and made a part hereof for all purposes.

Section 2. The City Council of the City of Spring Valley Village hereby adopts the Electronic Signature Policy attached hereto as Exhibit "A."

Section 3. This Resolution shall become effective immediately upon its passage.

DULY PASSED AND APPROVED this the ____ day of _____, 2021.

_____
Marcus Vajdos, Mayor
City of Spring Valley Village, Texas

ATTEST:

_____
Roxanne Benitez, City Secretary
City of Spring Valley Village, Texas

EXHIBIT “A”

TO

RESOLUTION NUMBER 21-XX

Effective Date: _____
Approved: _____

CITY OF SPRING VALLEY VILLAGE
POLICIES AND PROCEDURES

TOPIC: Electronic Signature Policy

PURPOSE

The City of Spring Valley Village adopts electronic signatures as a means of signing documents and records to promote paperless processing, to reduce the reliance on and cost of paper transactions, and to allow quicker access to documents.

This policy is designed to increase efficiency by adopting electronic signatures as an alternative to manual signatures on paper documents and to provide a process by which departments can be certified to incorporate electronic signature technology into their electronic business processes. The City recognizes electronic signatures are becoming a routine way of conducting business and that formal rules governing the use of electronic signatures by the City are necessary. This policy applies to all City departments and divisions that desire to use electronic signatures to conduct transactions both internal and external to the City.

POLICY/PROCEDURE

A department may use electronic signatures to conduct City business transactions and approvals in accordance with the following guidelines and the Texas Uniform Electronic Transactions Act, Tex. Bus. & Com. Code Ann. Section 322 et seq. (West 2009).

Where policies, laws, regulations, and rules require a signature, that requirement is met if the document contains an electronic signature.

Each party to a transaction must agree to conduct the transaction electronically in order for the electronic transaction to be valid. Consent may be implied from the context and surrounding circumstances.

If a law prohibits a transaction from occurring electronically, the transaction must occur in the manner otherwise allowed by law.

If a law requires an electronic signature to contain specific elements, the electronic signature must contain the elements specified by law.

The manner and circumstances in which electronic signatures are acceptable is enumerated in the Texas Uniform Electronic Transactions Act, Tex. Bus. & Com. Code Ann. Section 322 et seq. (West 2009).

A department converting to an electronic signature system must work with the City's IT Department and the City Secretary's Office, as the City's Records Management Officer, to ensure the following have been met:

- The electronic records and signatures must be maintained in a manner that efficiently and reliably preserves and protects the information over time so that it may be used for recognized governmental and legal purposes. The City Attorney should be consulted if the electronic signature system will involve procurement, contracts, real estate, or matters governed by specific statutes or regulations not routinely handled by the department, the City Secretary's Office, or the IT Department.

- Electronic signature systems for transactions involving transfer of funds or committing the City to actions or contracts should account for and minimize the City's financial and legal liability.

- Electronic signature systems for secured transactions or transactions involving sensitive information should protect the City and users in terms of legal liability (civil or criminal), privacy, and confidentiality.

- Both the record and the signature must be capable of long-term preservation in a format that will be supported for a duration consistent with adopted retention schedules. After documents are signed electronically, a signed version of the documents should be stored on a file storage system owned by the City of Spring Valley Village so they can be preserved as needed. Any contracts signed electronically should be forwarded to the City Secretary in order to preserve them for the appropriate retention period.

- The technology must ensure that the signatory cannot reasonably deny signing or sending a document.

- The electronic signature technology must be reasonably compatible with relevant software applications.

- The cost and use of the electronic signature method must comport with the degree of transactional and systemic risk.

- The IT Department will evaluate the effectiveness of the electronic signature method in terms of verification and system security.

USE OF ELECTRONIC SIGNATURES

Once an electronic signature system has been approved, a department may use electronic signatures in lieu of manual signatures.

AUTHORITY AND EFFECT OF ELECTRONIC SIGNATURES

In accordance with Sections 322.005(b) and 322.007(d), Tex. Bus & Com. Code Ann. (West 2009), where policies, laws, regulations, and rules require a written document or signature, that requirement is met if the document or signature is, respectively, an electronic record or contains an electronic signature, as otherwise required by law.

Electronic signatures shall not be used, and shall have no binding authority or effect on City records, where electronic signatures are prohibited by law or other City policies or where a law prohibits a transaction from occurring electronically.

This policy shall not preclude the use of any other types of signatures, including without limitation, manual signatures or facsimile signatures. This policy shall not limit, alter, modify, or otherwise affect any requirement imposed by law relating to (a) authority, obligations, or procedures required for facsimile signatures; (b) the proper procedures and authorization necessary to execute City records; (c) requirements to legally bind or obligate the City under any contract or agreement; and (d) the legal effectiveness, validity, or enforceability of any City record, including any contract or agreement, signed electronically in violation of any such laws. All laws regarding signing City records shall apply to electronic signatures and electronic records, and all laws regarding signing, adopting, entering in, or executing contracts, agreements, purchase orders, statements of work, ordinances, leases, licenses, and any other document purporting to be legally binding upon or otherwise obligating the City.

In the event that any electronic signature is found by the City Attorney to have been used or applied to a City record or certified in violation of this policy or any other law, the electronic signature shall be null and void and the City record signed electronically using the unlawful, fraudulent, unauthorized or otherwise improper electronic signature shall also be (a) null and void, (b) discontinued, and (c) unenforceable against the City.

CONFLICT AND REPEAL

If the provisions of this policy conflict with any law, that law shall prevail.

Spring Valley Village City Council
Agenda Item Data Sheet

MEETING DATE:	February 23, 2021
TOPIC:	**Ordinance Number 2021-XX** **AN ORDINANCE OF THE CITY OF SPRING VALLEY VILLAGE, TEXAS, DECLARING UNOPPOSED CANDIDATES IN THE MAY 1, 2021 GENERAL CITY ELECTION ELECTED TO OFFICE; PROVIDING FOR THE INCORPORATION OF PREAMBLE; CANCELING THE MAY 1, 2021 GENERAL CITY ELECTION; PROVIDING A SEVERABILITY CLAUSE, AND AN EFFECTIVE DATE.**
BACKGROUND:	During the candidate application filing period of January 13 to February 12, 2021, the City received only one application for each of the open positions in the General Election. We received applications from the following: • David Dominy (Council Member position) • Tom Donaho (Council Member position) • Bo Bothe (Council Member position) Additionally, the City received no write-in candidate applications by the filing deadline of February 16, 2021. Since all of the applicants were unopposed, the City may cancel the General Election for this year. On Election Day, Saturday, May 1st, a notice will be posted on the front doors of City Hall making residents aware that the election was cancelled. The notice will also be posted on the City's website. I have informed all of the applicants, and they will be sworn in on May 25, 2021, prior to the City Council meeting.
RECOMMENDATION:	Staff recommends approval of the Ordinance.
ATTACHMENTS:	• Ordinance Number 2021-XX
FUNDING ISSUES:	☒ Not applicable – no dollars are being spent or received. ☐ Full amount already budgeted in Acct/Project# _____ ☐ Not budgeted, if approved, the following will be included in the next Budget Amendment: ☐ $_____ from Acct/Project# _____ will be transferred to Acct/Project# _____ ☐ $_____ from unassigned fund balance will be used and added to Acct/Project# _____
FINANCE VERIFICATION OF FUNDING:	

SUBMITTING STAFF MEMBER:	**CITY ADMINISTRATOR APPROVAL:**
Roxanne Benitez, City Secretary	

ORDINANCE NO. 2021-XX

AN ORDINANCE OF THE CITY OF SPRING VALLEY VILLAGE, TEXAS, DECLARING UNOPPOSED CANDIDATES IN THE MAY 1, 2021 GENERAL CITY ELECTION ELECTED TO OFFICE; PROVIDING FOR THE INCORPORATION OF PREAMBLE; CANCELING THE MAY 1, 2021 GENERAL CITY ELECTION; PROVIDING A SEVERABILITY CLAUSE, AND AN EFFECTIVE DATE.

WHEREAS, the general city election was called for May 1, 2021, for the purpose of electing three (3) members to the City Council for full terms in the general election; and

WHEREAS, the City Secretary has certified in writing that there is no proposition on the ballot, that no person has made a declaration of write-in candidacy, and that each candidate on the ballot is unopposed for election to office; and

WHEREAS, under these circumstances, Subchapter C, Chapter 2, Election Code, authorizes the City Council to declare the candidates elected to office and cancel the election.

NOW THEREFORE,

BE IT ORDAINED BY THE CITY COUNCIL OF THE CITY OF SPRING VALLEY VILLAGE, TEXAS, THAT:

Section 1. The facts and matters contained in the preamble of this Ordinance are hereby found to be true and correct and are incorporated herein.

Section 2. The following candidates, who are unopposed in the May 1, 2021 General City Election, are declared elected to office and shall be issued certificates of election following the time the election would have been canvassed:

COUNCIL MEMBERS, AT LARGE

Bo Bothe (two-year term)

David Dominy (two-year term)

Tom Donaho (two-year term)

Section 3. The May 1, 2021 General City Election is canceled, and the City Secretary is directed to cause a copy of this Ordinance to be posted on Election Day at each polling place that would have been used in the election.

Section 4. It is declared to be the intent of the City Council that the phrases, clauses, sentences, paragraphs, and sections of this Ordinance are severable, and if any phrase, clause, sentence, paragraph, or section of this ordinance is declared invalid by

the judgment or decree of a court of competent jurisdiction, the invalidity shall not affect any of the remaining phrases, clauses, sentences, paragraphs, or sections of this ordinance since the City Council would have enacted them without the invalid portion.

Section 5. This Ordinance shall take effect upon its final passage, and it is so ordained.

DULY PASSED, APPROVED, AND ADOPTED this the 23rd day of February, 2021.

_____
Marcus Vajdos, Mayor
City of Spring Valley Village, Texas

ATTEST:

_____
Roxanne Benitez, City Secretary
City of Spring Valley Village, Texas